Multi-party telephone lines

Douglas A. Kerr

Issue 5
March 9, 2018

ABSTRACT AND INTRODUCTION

A multi-party telephone line (known to the general public as a "party line") uses a single pair of conductors (today usually in a cable) from the telephone central office to serve two or more subscribers' "stations". The motive is to spread the capital and maintenance cost of the cable pair, and the equipment associated with it at the central office, over two or more subscribers' service, allowing for lower rates than for an *individual line* (a single-party line, often called by the general public a "private line").

The technical arrangements for this type of service are varied and ingenious. In this article I describe many of these.

Topics covered include: the principle of multi-party lines; basic telephone line operation; alerting (ringing) the various parties; numbering plans for multi-part lines; identifying the calling party; noise considerations affecting the design of ringing systems; construction and operation of illustrative telephone ringers; and operation of manual and dial switching systems for multi-party lines.

1 PREFACE

1.1 General

The matter of multi-party line telephone service is an incredibly rich and complex area, and many different things were done in different ways from time to time. And I only know a certain amount of all that.

What I describe here are the most common or most historically-significant schemes, with such details as I know (and think are worth presenting).

1.2 A detail of editorial style

In many cases, the systems or methods of operation I describe are, for all practical purposes, things of the past, and my general discussion will reflect that. But, in describing the details of operation, I will generally use the present tense ("Next, the operator **plugs** the cord into . . .", not, "Next, the operator **plugged** the cord into . . .). (This is recommended by my copy editor, in whose intuition I have full confidence.)

2 INDUSTRY CONTEXT

From the earliest part of the 20th century through the telephone industry in the United Sates and Canada consisted of two interleaved "worlds", The Bell Telephone System ("Bell System") and the collection of non-Bell telephone companies. During much of that era, the preponderance of the telephone sets and central office equipment (and almost everything else, actually) used by Bell companies was made by, or procured through, Western Electric Company, Inc., owned by AT&T, the parent of the Bell System. The apparatus and equipment was (from its formation in 1925) developed by Bell Telephone Laboratories, Inc.

In contrast, in the non-Bell world, it was very rare to find Western Electric telephone sets or central office equipment. Rather, that hardware was made by numerous other manufacturing firms, some specializing in telephone sets, some in central office equipment, and many of them in both.

Over the years, the matter of multi-party lines was a fascinating challenge to inventors, and the result was a plethora of schemes and their implementation. Certain techniques, however rose to the fore and (albeit with much variation) became most widely used. For various reasons, certain schemes were primarily used in the Bell System, and some others mainly in the non-Bell world.

In this article, I will describe the important schemes used in both the Bell System and non-Bell worlds. However, my clearest focus will be on the systems used in the Bell System world.

3 SOME TERMINOLOGY

3.1 Tip and ring notation

Under manual telephone switching, the connections between parties were made by human operators at switchboards. The connections were made by coupling and control circuits (*cord circuits*) whose two ends terminated in cords with plugs. These plugs were inserted into jacks in the switchboard that led to the telephone lines.

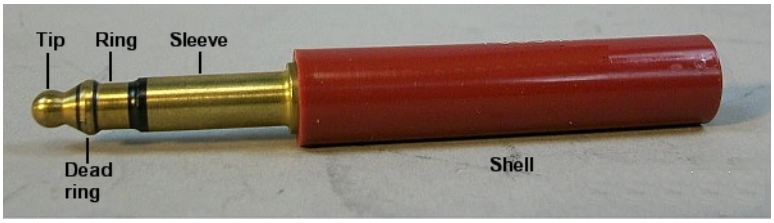

Figure 1. 310-type switchboard plug

In general, the plugs had three contacts (and of course the jacks had mating contacts for all three).

Figure 1 shows a typical switchboard plug.

The three contacts I referred to above are referred to as the *tip*, *ring*, and *sleeve*, rather obvious choices. The *dead ring* is not a contact; its purpose is to provide a substantial gap between the tip and ring contacts so that they cannot be momentarily bridged ("short circuited") by the ring contact spring in the jack as the plug is inserted. Why is it not just made of the plastic insulation? Because that would wear more quickly than the brass ring.[1]

The tip and ring contacts carry the path to the conductors of the telephone line itself. The sleeve contact carries a lead that is used only for various control purposes inside the switchboard.

Because of this history, even today, in the U.S., regardless of the type of switching equipment (if any), the two conductors of the telephone line (or any telephone circuit) are called the *tip* and *ring* conductors.

3.2 Battery

In both manual switchboards and automatic ("dial") switching systems, the DC voltage from which the system operates is supplied by a system of large storage batteries that are continually recharged by rectifier systems (or earlier, motor-generators)—essentially the same scheme used on automobiles. As a result, in describing the operation of telephone circuits, the DC voltage is often spoken of as "battery". Today, that voltage is most often nominally 48 V.

For an important but esoteric reason (which I will not describe here), in most cases, the "battery" voltage was negative with respect to ground[2] (thus my often mention, for example, of "-48 V").

With manual switchboards, because of a certain subtle consideration I will not discuss here, it became the convention that the DC voltage applied to a telephone line had the battery voltage applied to the ring conductor, and the other side of the DC feed (ground) was applied to the tip conductor. That convention is still generally followed today.

---

[1] In more recent times, the dead ring was indeed made of plastic, a more durable plastic being available.

[2] I believe that at one time Alberta Government Telephones, of Alberta, Canada, used "positive battery".

4 HISTORICAL BACKGROUND

4.1 Telephones in "intercom" service

Telephone sets were at first almost always used in pairs in what we might call today "intercom" service, perhaps allowing communication from the office to the warehouse, or from the manor house to the equerry's quarters in the stables.

Signaling was generally done in a way that was the direct precursor of today's ringer signaling. Each station was equipped with a ringer (what a civilian would call a "bell"), which operated essentially as ringers do today, activated by a low-frequency AC signal. At the station, the ringer coil was connected directly across the two-conductor line. (A further description of ringer construction and operation is found in Appendix A.)

For one station to call the other station, ringing voltage (typically 60-80 V RMS, at a not controlled frequency, but typically in the range 15-25 HZ) was generated by a hand-cranked *ringing generator*[3] at the calling station. When the user began turning the crank, a cam arrangement operated a set of contacts that disconnected the line from the telephone set proper (and its ringer) and connected it instead to the output of the generator. The ringer at the other end operated from the received AC voltage and (hopefully) alerted the person there.

The transmitters on these telephone sets were usually of the *variable resistance* type (in other contexts, they would be described as "carbon microphones"). The DC voltage to energize them came from a dry cell battery, typically comprising 2 or 3 of what were later called No. 6 dry cells (about the size of a quart of milk). There was no DC voltage on, or current through, the line.

4.2 The telephone exchange

Before long, the concept emerged of having telephones in various homes and offices connected to a telephone exchange, to some type of switchboard, at where an operator could connect any telephone line to another. And ultimately, the buildings where this happened became known formally as *central offices*.

Initially, the *modus operandi* was much like described above. To get the attention of the operator, a subscriber would operate the ringing

---

[3] Often spoken of as a "magneto", in part because at the time this was a common name for any electrical generator, but more so because their construction was much like the magnetos used to power the ignition system in early gasoline engines.

generator at his station. Rather than operating a ringer, this operated an electromechanical device at the switchboard that, usually by dropping a little "flag", alerted the operator that this line wanted to make a call. What happens next is very parallel to what is described in section 4.3.

4.3 Common battery operation

As the "telephone service industry" formed, an early policy adopted by many companies was that only they should provide and maintain the telephone sets. With this of course came the responsibility of replacing, when needed, the dry cells used in the sets, which turned out to be a really big pain.[4]

Largely motivated by concern over this labor-intensive operation, a new *modus operandi* emerged. In this, DC voltage was applied to each line from the central office (where it was supplied by a large storage battery, operated as described in section 3.2).

When a station was off-hook[5], it provided a DC path across the line, a path that led the resulting current through the transmitter, energizing it. A battery was no longer required at the station.

This scheme was first called the *central energy system*, but that name was soon supplanted by the term *common battery system*.

An advantage beyond elimination of the need to periodically replace the batteries at each station was that now whether the station was off-hook or not could be perceived at the central office (by virtue of the flow or not of current in the line.

Now it was no loner necessary to have a ringing generator at each station. To initiate a call, the subscriber would just take the telephone set off-hook, and the resulting flow of current was detected, at the central office, by a per-line relay, which lit a lamp associated with the line so the operator could "answer" this request for service.

---

[4] An iconic painting from the era shows a telephone company employee driving a large horse-drawn flat wagon, filled with these large dry cells.

[5] The term goes back to the time in which telephones had a separate receiver (rather than a handset), which (in its earliest form) had a small ring near its "butt end" which, when the telephone was not in use, was hung on a hook. The hook was on a movable arm, whose movement operated electrical contacts. This in effect disconnected the telephone circuitry from the line when the receiver was "hung up", a state thus called technically "on hook". When the receiver was lifted, the state of the telephone set was then called, technically, "off hook". Those two terms persist today for the states of telephone sets and the "signaling states" of telephone lines.

With the new mode called *common battery* operation, there needed to be a name for the older mode (which had no name, since for quite a while that was just how telephone lines worked). The very apt name *local battery* operation came into general use for that.

But because, in general, local battery lines used magneto signaling (to get the attention of the operator), and common battery lines didn't, it was also common to speak of local battery lines as "magneto" lines, and to call switchboards that worked with local battery lines "magneto" switchboards.

This is all of historical interest in terms of the evolution of the technology I will discuss, but with a few exceptions, further discussion will be predicated on common battery operation.

5 THE COMMON BATTERY TELEPHONE LINE

5.1 Introduction

Here we will speak entirely of common battery operation, the type of operation used on the preponderance of telephone lines in "modern" times.

For simplicity, think for the moment in terms of individual line (not multi-party) telephone service.

For each line, a pair of conductors (today almost always in a cable) goes from the serving central office to the subscriber's location. At the central office, there is some circuitry distinctly associated with the line. In electromechanical offices, this is often a *line circuit*, which primarily comprises a relay used to determine when the subscriber has "lifted the handset" to place a call. There are other components in the "switching fabric" itself that can be specifically attributed to the line, and a certain fraction of the cost of other components can be reasonably attributed to lines.

When the line is idle, a DC voltage (typically −48 V in modern central offices) is applied to the line. At the station, with the handset "on hook", there is no DC continuity at the station so no current flows through the line.

5.2 The basic telephone set circuit

For reference in the discussions to follow, Figure 2 shows the basic conceptual circuit of a telephone set (as would be used on an individual line).

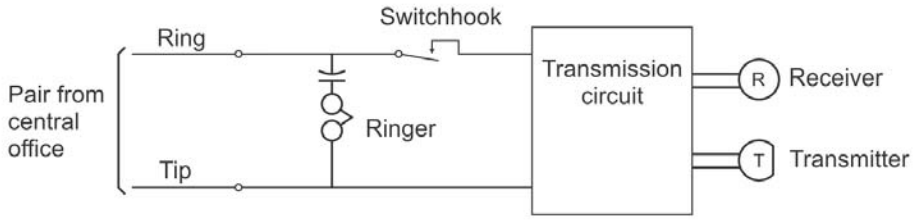

Figure 2. Basic telephone set circuit (individual line station)

The switchhook contact is operated by plungers or such in the handset cradle, When the handset is "on hook", the contact is open, and there is no path through the telephone set circuit proper. When the handset is "off hook", the contact is closed, and the path is completed. [6]

The transmission circuit comprises a transformer, capacitors, resistors, and so forth. It is used to couple the receiver and transmitter to the line. It does this in such a way that the voice signals from the transmitter do not come back into the receiver at "full strength" (an arrangement called an "anti-sidetone" circuit, *sidetone* referring to the speaker's voice coming out of his own receiver, a phenomenon that is good but only if it is not "too strong").

5.3 The ringer

5.3.1 *The ringer and the ringing signal*

What civilians call the "bell" in a telephone set is known formally as the *ringer*. Many of the scenarios in this article revolve around the ringer and how it is operated.

In all major telephone systems, the ringing signal is a relatively high, relatively low-frequency AC signal, perhaps 75-90 V RMS at (most commonly) 20 Hz. Often the applied voltage also has a DC component (in other fields it might be called a *bias*), typically -48 V, whose purpose will shortly become apparent. This composite (AC + DC) signal is often called a "superimposed" ringing signal.

Despite the role of the ringer as a pivotal player in our various scenarios, we will largely treat it as a "black box", only concerned with its properties and not how those are implemented. However, Appendix A discusses in some detail the actual construction of typical

[6] The figure omits various details not pertinent to the story here, such as the dial (if any), a switchhook contact to mute the receiver while the switchhook line contact is opening or closing, and so forth.

electrometrical ringers (and in modern time these in fact have often been replaced with "electronic" ringers).

5.3.2 *The ringer and the telephone line*

In Figure 2, we see that the ringer (that is, its coil)[7] is connected, though a capacitor, from the ring conductor to the tip. The capacitor provides that there is no "DC continuity" through the ringer circuit. Thus with the set on-hook, no (DC) current will flow through the loop.

5.4 Initiating ("originating") a call

When the subscriber lifts the handset ("goes off-hook"), the switchhook contact closes, completing the path to the transmission circuit (which has DC continuity), and thus current flows in the line. That current is typically in the range of 20 mA to 80 mA, dependent largely on the resistance of the line conductors.

A *line relay* (or equivalent) associated with the line at the central office detects this current, and the switching system makes the necessary preparations for the subscriber to make a call, including sending dial tone over the line (this assumes the use of automatic, or "dial", switching, but for manual switching the functions are wholly analogous).

Generally speaking, the DC current that flows when the telephone set is "off hook" (including during the call proper) serves to energize the *transmitter* (microphone) at the set, which traditionally is of a variable-resistance type.[8]

5.5 Receiving a call

Notifying the subscriber that there is an incoming call is done by sending the ringing signal (described above) over the line; it is "applied" from one conductor to the other. This is of course interrupted to form the familiar ringing pattern (or "cadence").

As mentioned earlier, the capacitor in series with the ringer prevents any DC current from flowing thorough the ringer. When the line is idle

---

[7] I use here the "traditional" schematic symbol for the ringer. This is derived from the construction of ringers for many years, They had two cylindrical coils on metal cores, side by side. The two coils were connected in series, this originally being done by small "pigtails" from one end of each coil being soldered together "in the open". The little "V" on the symbol is evocative of that joint.

[8] In modern telephone sets, the transmitter may be of the moving-coil or electret type, requiring an amplifier to increase its output signal to that required to send over the line That amplifier is normally powered by the DC current that flows in the line.

such current flow would be misinterpreted as a request to make a call, and during a call, any flow of DC current through the ringer would take away from the current available to energize the transmitter. But the reactance of the capacitor at 20 Hz is low enough that the AC component of the ringing signal will pass to the ringer, causing it to ring.[9]

As mentioned earlier, there is a DC component to the ringing signal (usually -48 V)[10] and, during the "silent intervals" in the ringing pattern a DC voltage (again usually -48 V) is applied to the line. The ringing voltage/silent interval voltage is applied at the central office through the coil of a relay[11] that will only respond to a DC component of the current through it, not to any AC component. This is referred to as the *ringing trip relay*.

With the telephone set idle (as it should be if an incoming call is being directed to it), there is no DC continuity through it. Thus there is no DC component to the current that flows in the line from the ringing signal (in either its "ringing" or "silent interval" phases), even though there is a DC component to the voltage during both phases.

But as soon as the subscriber lifts the handset, there is a DC path through the transmission circuit of the telephone set, and thus there is a DC component to the current that flows in the line from the ringing signal (in either phase).

This DC current operates the ringing trip relay (or triggers its electronic equivalent). This causes the central office equipment to remove the ringing signal and complete the path for the transmission of voice over the connection. This is called *tripping* the ringing, which leads to the name of the relay.

6 THE CONCEPT OF THE MULTI-PARTY LINE

The basic concept of a multi-party telephone line (usually called by the general public a "party line") is that a single pair of line conductors will provide service to two or more subscribers (the "parties" referred to in

---

[9] Classical ringers had an electromechanical "motor" involving an electromagnet and a permanent magnet (see Appendix A). Modern "electronic" ringers rectify the ringing signal voltage and use the resulting voltage to energize an oscillator that generates a distinctive modulated tone signal that is rendered through a tiny "loudspeaker".

[10] This is often called "superimposed ringing", as a DC component is "superimposed" on the basic AC signal.

[11] In modern central offices this is actually replaced by an electronic circuit.

the name). In technical discussions, their telephones are sometimes referred to as “stations” on the line.

The multiple stations are connected in parallel to the line conductors.

In reality, a single pair may not be shared by all the parties for the whole distance from the central office. It typically is in a rural situation, where the telephone cable (or perhaps even an open wire line) runs along a road on which all the parties live. As the cable passes each subscriber, a service wire (“drop wire”) is connected to that pair and leads to the house.

But in an urban or suburban neighborhood, the multiple parties might not live on the same street. There, the single pair coming from the central office might, in a neighborhood *cross-connecting cabinet*, be connected (in parallel) to pairs in two or more cables that run down different streets.

In any case, the objective is to share the cost of the telephone line conductors themselves (at least out to the cross-connecting cabinet), and as well the direct and indirect cost of the supporting equipment for the line at the central office, over several subscribers’ service. This in turn allows for a lower rate for “party line” (e.g., multi-party) service than for “individual line” (single-party) service (often called by the general public a “private line”[12 13]).

It should be noted that in a multi-party line (as usually implemented in the U.S. and Canada), when one party is using the line, any other party, if they pick up the handset at their station, will hear what is being said, certainly a gap in “privacy”. In fact, the way they must find out if the line is already in use is to pick up the handset. If there line is busy, they will probably hear the existing conversation, and in any case will not get dial tone. And they may be anxious to place a call, “right now”.

There is of course a gigantic body of “etiquette”, “ethical” and even “legal” issues involved here! (Such matters are beyond the scope of this article.)

---

[12] That term formally has a much different meaning: a telephone line that is not part of the switched telephone network.

[13] When I was growing up, in a suburb of Cleveland, Ohio, two-party service was the norm for middle-class residential subscribers. If one of the gang had a “private line”, we considered him to be “sort of rich”.

The use of multi-party lines has waxed and waned over the history of the telephone industry. Figure 3 is an interesting advertisement from the Montreal (Quebec, Canada) *Gazette* for December 31, 1919.

Two-Party-line Telephone Service

THE necessary curtailment of new construction during the war, followed by the unprecedented development since the armistice, have resulted in a serious shortage of facilities in many of our City exchanges.

In order to utilize our equipment to the best advantage and to avoid refusing service to anyone, it is necessary to encourage the development of what is known as *two-party line service for residence purposes.*

In the minds of many, the term "party-line service" is associated with the constant ringing of the telephone bell on calls for the other subscriber on the same line. With the Central Energy System in use in Montreal, the operator can ring either of the telephones on a two-party line without disturbing the other.

While it is not the intention that any present subscriber should be deprived of his individual line service, it has become necessary for the present to adopt *two-party line service only,* in certain sections of the City where the pressure on facilities is extreme.

The rate for two-party line residence service is $30.80 per annum, as compared with the $38.50 rate for the regular individual line.

In United States cities in which telephone service is on the flat rate basis, as in Montreal, 65 per cent. of residence users are connected on party-lines, as compared with 35 per cent. on individual lines.

THE BELL TELEPHONE COMPANY OF CANADA

The Bell Telephone Company
of Canada

Figure 3. Advertisement in the Montreal *Gazette*, December 31, 1919

But in more recent times, the telephone companies moved away from offering this kind of service, and by the 1970s (in the U.S.), regulatory, policy, and market developments brought essentially its complete demise except in rural areas (see section 12).

7 SIGNALING THE CALLED PARTY

7.1 Introduction

A major technical issue is, upon the arrival of a call for one of the parties on a multi-party line, how does the central office signal ("ring") that party. There are numerous schemes, the important one of which we will describe.

7.2 Code ringing

Here, conventional ringers are used at all stations, connected in the conventional way (from tip to ring) as seen in Figure 2. For each station there is a distinctive ringing pattern (sometimes called a "cadence"). For example, there may be:

- A single ring
- Two short rings
- Three short rings
- One long ring and one short ring (in patterns of this type, patterns starting with one long ring were preferred)
- Etc.

Of course, this means that for every incoming call to a party on the line, every party hears the ringing. But this was a "small price to pay" for the ability to have economical telephone service (or telephone service at all, since in many places, multi-party service, with code ringing, was the only service available).

"That's my ring" was a frequent outcry when a subscriber realized that a call was in fact for him; it became a catch phrase for other situations.

7.3 Frequency selective ringing

Here, different frequencies of the ringing signal (in the overall range of 16 Hz to 66 Hz) are used to ring the different stations. The ringers are of a special type, mechanically-resonant, each one "tuned" to respond to only one of the frequencies in the set being used.

The harmonic system was the first one introduced. This set of frequencies was readily generated by alternators with different numbers of poles on a common shaft, driven by a motor operated from AC power.

Figure 4 shows three different frequency systems that were used.

System	Frequencies (Hz)					Original plan
Harmonic	16-⅔	25*	33-⅓	50	66-⅔	Multiples of 16⅔ Hz
Decimonic	20	30	40	50	60	Multiples of 10 Hz
Synchromonic	16*	30	42	54	66	Odd multiples of 6 Hz

- Added later; not in the "plan"

Figure 4. Frequency-selective ringing system frequencies

The advantage of the Decimonic system over it was that the different frequencies could be readily derived from a 60-Hz source with a static ferroresonant magnetic frequency divider system. Such a system was more attractive from various standpoints than a motor generator set.

The Decimonic system was in fact originally introduced in part by the preeminent manufacturer of static ringing voltage generating systems, who already made widely-used systems to generate the commonly-used 20-Hz ringing voltage.

The claimed advantage of the Synchromonic system was that, since none of the frequencies were integral multiples of any of the others, it averted a problem sometimes encountered in which flaws in the line (bad joints, etc.) caused nonlinearities which in turn could cause the generation of harmonics from a ringing signal.

Thus, using the harmonic ringing system, the application of a 16⅔ Hz signal could cause the unwanted generation of signals at 33⅓, 50, and/or 66⅔ Hz, as a result of which ringers at other stations (tuned to those frequencies) might inappropriately ring (perhaps feebly, not much comfort to the afflicted subscribers).

In the basic system, the ringers are connected (in series with a capacitor, in the usual fashion) from tip to ring. (See however below under "divided frequency selective ringing", section 7.5.)

This is a "full-selective" system: when one party is rung, the other parties hear no ringing.

This approach was only rarely used in the Bell Telephone System, but was popular with non-Bell companies, especially for service in rural areas.

7.4 Divided ringing

This was the common implementation for two-party lines, which were very common in the Bell Telephone system in urban and suburban areas. Here, at each station, the ringer is connected not from tip to ring but rather from tip (or ring) to ground, (which of those sides being determined by which party that station is).

At the central office, to ring the first party, the ringing signal is applied to the ring conductor (against ground, of course; it always is) with the tip conductor grounded. The ringer at that station is connected from ring to ground, and thus is activated, The ringer at the other station, connected from tip to ground, receives no voltage and is not activated.

Figure 5 shows the ringer circuit arrangement at the first party station (often called the "ring party" station, because of the side of the line on which its ringing signal appears).

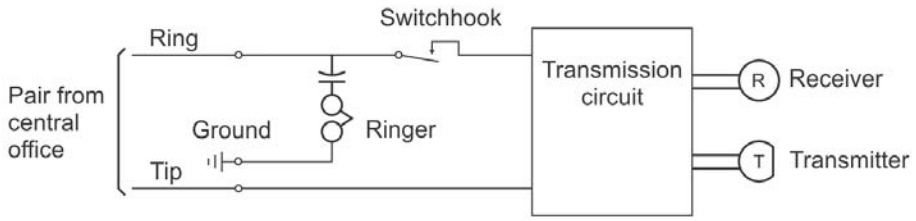

Figure 5. Ringer circuit at ring-party station

Note that this application of voltage by the central office is in fact exactly what is done to ring an individual line (even though we think of it here in a different way). Hold that thought.

To ring the second party ("tip party"), the ringing signal is applied to the tip conductor (against ground, of course) with the ring conductor grounded. The ringer at that station is connected from tip to ground, and thus is activated. Figure 6 shows the circuit arrangement at the tip party station.

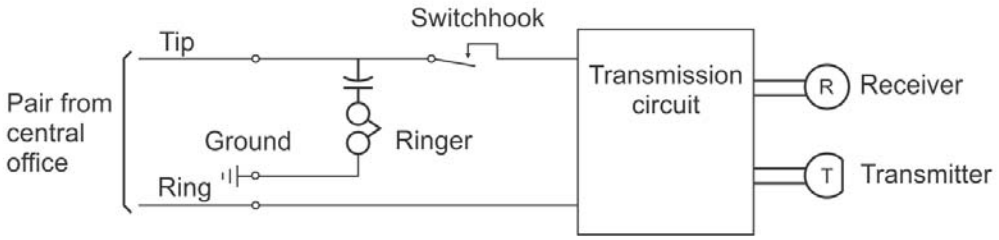

Figure 6. Ringer circuit at tip-party station

The ringer at the other station, connected from ring to ground, receives no voltage and is not activated.

Note that this application of voltage by the central office is in fact exactly what would be done to ring an individual line if the tip and ring conductors were reversed. Hold that thought, too.

This is a full-selective system: when one party is rung, the other party hears no ringing.

Note that for this system we must have at the station a reliable ground, normally obtained from a nearby water pipe, or a ground rod driven into the earth if a water pipe is not available. (You have probably seen the little yellow tags on the ground wire at the station "protector" warning us not to disturb it.)

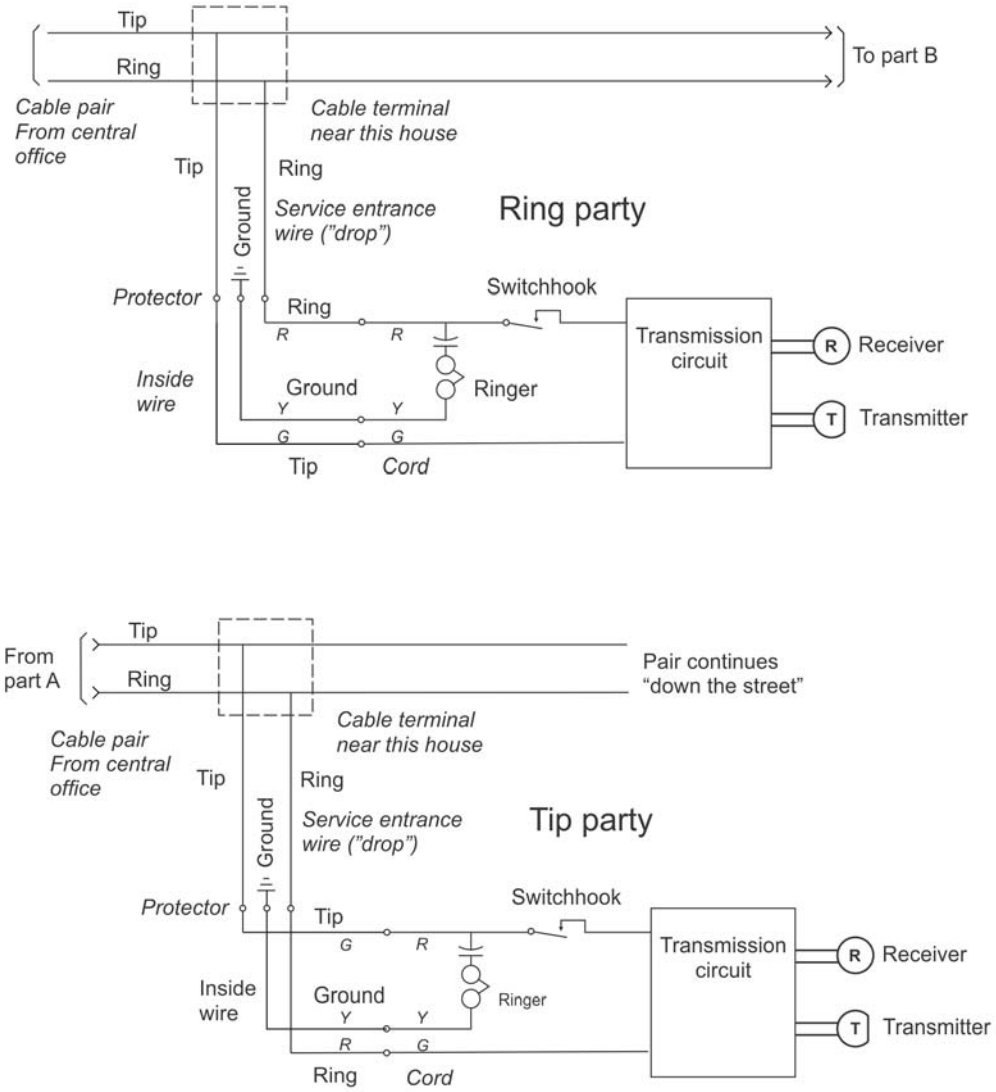

Figure 7. Two-party divided-ringing line with wiring details

Figure 7 shows the whole situation for a two-party line using divided ringing. It includes a lot of detail of the physical arrangement of the wiring not pertinent to the principles we have discussed. But I have included these to give some "realism" to the matter. The figure is in two parts so the ample detail can be seen at a reasonable size.

In the figure, names of physical wiring things are in italics. Also in italics are the abbreviations for the color codes of conductors, in the traditional system (**R**ed, **G**reen, **Y**ellow) as applies to the inside wiring and the telephone set cord.

For simplicity, we assume that the two stations are actually served by the same cable run (perhaps they are on the same street).

At each subscriber's house, the serving pair is accessed in a cable terminal. For the traditional "aerial" cable, these are the little aluminum boxes (or, in modern times, black plastic sausages) seen along the cable every few houses.

At the terminal, the pair serving the subscriber is connected to a piece of two-conductor *service entrance wire* ("drop wire"). At the house this terminates in a *station protector*. Its main job is to protect against high voltages that might inadvertently come onto a line conductor, by shorting them to ground and then, if the problem persists, by making a permanent ground on the conductor.

The protector also serves as the point of connection between the service entrance wire (very durable and a bit stiff, with two conductors) and the inside wire (smaller, more flexible, more stylish and, if needed, having three conductors). And we will see that, in connection with our divided ringing system, it is very handy that there is ground available at the protector.

The inside wire ("station wire") has three conductors, traditionally red, green, and yellow. Red carries the ring conductor of the line[14], green the tip, and yellow the ground from the protector.

At the ring party station, at the *connecting block*[15](typically on the baseboard) the three conductors of the telephone set cord are

---

[14] The traditional mnemonic is "red, ring, right", meaning that the ring is the red conductor, and if the tip and ring terminals are side by side, the ring is on the right. The complement is "tip, top", meaning that if the tip and ring terminals are one above the other (as they often are in a central office), the tip is uppermost.

[15] Not labeled in the figure.

connected to the correspondingly-colored conductors of the inside wire, thus establishing the situation we conceptually saw in figure 5.

At the tip party station, at the connecting block the red conductor of the telephone set cord is connected to the green conductor of the inside wire, and vice versa. The yellow conductor is connected in the obvious way. This establishes the situation we conceptually saw in figure 6.

7.5 Divided frequency selective ringing

This system uses one of the sets of five multiple frequencies (as described in section 7.3, but beyond that, applies the voltage on one line conductor or the other, allowing up to 10 parties on a full-selective basis.

7.6 Divided code ringing

This was most often used in a four-party context, but could be used for greater numbers of parties. Here, half of the stations have their ringers connected from ring to ground, and the others from tip to ground. To further distinguish among the parties with their ringers on one side of the line or the other, different ringing patterns are used (as described above under “code ringing”).

This is a “semi-selective” system in that when one party is rung, the other party whose ringers is connected to the same side of the line hears ringing, but the other two parties don’t. Thus the degree of disturbance to parties from calls to other parties is substantially reduced, compared to the use of basic code ringing.

7.7 Four-party full-selective ringing

This was widely used by the Bell Telephone System for four-party lines. Four electrically-unique ringing signals were used, distinguished by combinations of two two-fold properties.

- The ringing voltage is applied to either the **ring** or **tip** conductor of the line ()the other conductor being grounded).
- The DC component of the ringing signal is either **positive** or **negative**.

At two of the stations the ringer is connected from ring to ground; at the other two stations, the from tip to ground.

The ringers are not connected though a capacitor, but rather through a special gas triode tube. Figure 8 shows the concept. The gas tube is not labeled, but its electrodes are.

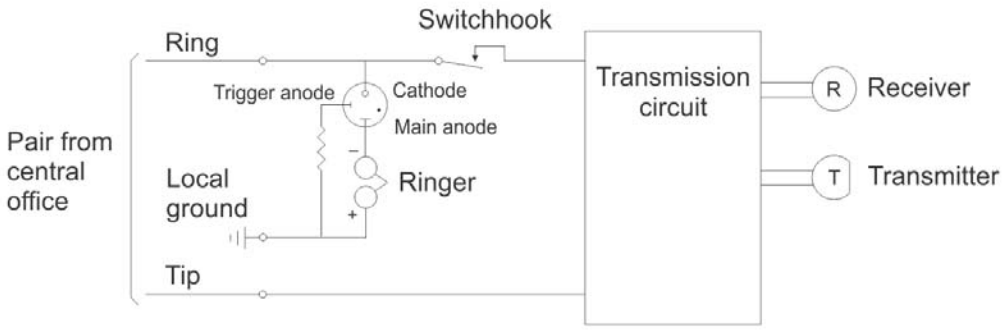

Figure 8. Four party full selective ringing with gas tube

This shows the setup for the party with ringing on the tip conductor and a negative DC component to the ringing voltage.

With the line idle or in a talking condition, the voltage on the relevant conductor of the line is never greater (in magnitude) than 48 V or so, at which voltage the trigger gap of the tube (cathode to trigger anode) does not “break down” (become conductive). The main gap (cathode to main anode) similarly does not break down. Thus, in those conditions, there is no flow of current through the ringer.

However, the trigger gap will “break down” under the high-voltage AC component of the ringing voltage, allowing the ringer to be energized, but only (in this case) if the DC component of the ringing signal is negative. This in turn “ignites” the main gap, allowing the ringing voltage to pass to the ringer. Well, it does during the negative half cycle, so the ringer actually receives only pulses of one polarity—the polarity that will cause the armature to move from its “rest” position to the other position. The ringer in the figure is marked with polarity markings that show what polarity that would need to be.

Among the two stations whose ringers are connected to one side of the line, at one station the gas tube is wired in “one way up”, and at the other station, “the other way up”.

This is a full-selective system; when one party is rung, the other three parties hear no ringing.

There are many technical wrinkles in this system, some of which are discussed in further detail in Appendix B.

7.8 Eight-party semi-selective ringing

Here, two of the eight stations are equipped to respond to each of the four electrically-unique ringing signals, and on top of that, one- and two-ring cadences are used. Thus at any station, the subscriber would hear ringing only for calls for them and for one of the other parties.

8 NUMBERING PLAN IMPLICATIONS

Various schemes were used with regard to telephone numbers for the parties on a multi-party line. This was heavily affected by the way in which the central office equipment (manual switchboard or automatic switching system) was arranged to work with such lines. We will come to that aspect in a little bit.

Under manual switching, especially in rural areas, it was common to give each line a telephone number, and (if it was a multi-party line) distinguish the stations by a suffix. For a code ringing system, it might work this way (I'll use the telephone directory format and assume that there were not multiple central offices in the directory area):

Wheelright W A	463
Willis John	562 R2
Wynter Peter J	589 R1
Zambone Enrico	572 R1L2S

Of course, the "R1" and "R2" meant "ring once" and "ring twice". For Zambone's number, it's one long ring and two short ones.

So does a caller wanting to reach Zambone's station tell the operator, "417 R1L2S, please" (or even, "417, ring one long, two short, please")? In theory, yes. But more likely, this will be a small town (from the short line numbers), and the caller probably says. "Hi, Joanne, gimme Enrico".

When we move into automatic ("dial") operation, this might work this way (for the same cast of characters):

Wheelwright W A	463
Willis John	562-2
Wynter Peter J	549-1
Zambone Enrico	572-5

Here the "party" identification was carried by a suffix digit (which might run from 1-5 or even 0-9 depending on the type of multi-party line ringing used) Note here that the three multi-party line telephone numbers (Willis', Wynter's, and Zambone's) are in a different "hundreds group" (5xx) from the individual line number (Wheelwright's) (4xx). This is because only the final switches in the hundreds groups for multi-party lines are arranged to expect that final

digit and use it to control the type of ringing. (This is discussed further in section 9.3.3.)

A scheme widely used in the Bell Telephone System for four-party full selective lines (under both manual and automatic operation) used a suffix letter, generally from the set J, M, R, and W, to designate which of the four ringing signals applies to the station. These letters were chosen to not be easily mis-heard when spoken (with regard to manual operation).

With regard to automatic operation, in metropolitan areas, the dials had most of the letters of the alphabet associated with digit values, and through that scheme J, M, R and W were associated with the digits 5, 6, 7, and 9.[16] In other areas, when the dials did not have the full repertoire of letters, they nevertheless had J, M, R and W on the corresponding digits.

Thus again using our directory format (and now assuming multiple central offices in the service area), we might see:

Albert P J	Main 4574
Arthur, William A	Cherry 6765J

The implementation of this is usually identical to that for the numerical party suffix scheme discussed just previously, and just as there, for automatic operation with the simpler switching systems, the multi-party subscriber lines would be in certain hundreds groups (where the “final” switches would expect the extra digit).

However, a different approach (not involving suffix digits or letters) was often used in of the Bell Telephone System, In it, the different parties on a multi-party line had completely different (and unrelated) telephone numbers. We’ll look into that more in a little bit.

---

[16] Curiously enough, while almost all the Bell Telephone System telephone companies adopted the J, M, R, and W letters, they did not all associate them the same way with the four electrical signals! You can imagine the wonderful war stories that flowed from that. My favorite is told in Appendix A

9 AT THE CENTRAL OFFICE

9.1 Some principles of manual switchboard systems

9.1.1 *Introduction*

The workings of manual switchboards is an extremely complicated topic. I will give a brief review of the topic, to set the stage for discussion about how multi-party operation works there in detail.

9.1.2 *An illustrative manual switchboard*

It is said that a picture of a pretty girl is worth several thousand words, and in that vein I will begin our tour with Figure 9, an annotated photo of an illustrative manual switchboard.

Figure 9. Manual switchboard, Vancouver, B.C., Canada (ca. 1947)

9.1.3 *The cord circuit*

The functional centerpiece of a manual switchboard (after the operator, of course) is the cord circuit, This switchboard has, at each operator's position, 17 of them, curiously enough the most common number in switchboards of this general type. The visible parts of them reside on a horizontal surface in front of the operator, each one

occupying a narrow front-to-back strip. One is outlined in white in the figure.

For each cord circuit there are, at the farthest edge of the ”shelf” from the operator, two switchboard cords, each equipped with a plug of the general type already seen in Figure 1. When the cords are idle, the plugs repose on their hind ends on little rubbery cushions in little wells in the shelf.

The other ends of the cords are connected to terminals on a bar at the back of the switchboard, about at the level of the shelves. The cord loops below the shelf pass through weighted pulleys, which take up the slack and make the plugs eager to return to their little wells when not plugged into anything.

The cord circuits are used to make connections between two subscribers. They are, however, much more than “patch cords”. Rather, the two cords of each cord circuit are tied together with circuitry which, among other things:

- Feeds DC to each of the connected subscribers so as to energize the transmitters at their stations, and so the cord circuit can (from whether current flows or not) tell if the station is “off hook” or not.
- Provides for the transmission of voice signals between the subscribers.
- Applies ringing voltage to one of the subscribers or the other (usually to the called subscriber).

9.1.4 *The line multiple*

In front of the operator (on what is called the *upper unit* of the switchboard) is a large jack field, most of which is divided into three areas (two of which are labeled on the figure).

At the top is the *line multiple* (you’ll see the basis of its name shortly). In this there is a jack for what we can think of, for the moment, as every line served by the switchboard.[17] (Switchboards of this class can often be equipped for as many as 10,500 lines. This one seems to be set up for about 6000 lines at the moment.) The jacks are

[17] More precisely, for every telephone number served by the switchboard. As we’ll see later, that might have a one-to-one correspondence with lines, but maybe not.

organized by telephone number and marked with the number[18]. It is to one of these jacks that the operator "delivers" a call.

But there may be 50 or more operators at the switchboard (at least during heavy traffic periods) Any one of them may need to "complete" a call to a certain line (that is, to a certain number). How can she reach that jack if it doesn't happen to be more-or-less in front of her?

The answer is that each line (that is, each telephone number), "appears" on several jacks along the entire length of the switchboard. The distance between the various "appearances" is typically about the width of three operator positions.

Thus, an operator needing to complete a call to a certain number will find a jack for that number either in front of her or in front of the position to the left or right of her (the nearest portion of it), which jacks she can "readily" reach (if the adjacent position is occupied, she reaches in front of the other operator, but that is part of the dynamic of operation.)

This arrangement is, not surprisingly, called a "multiple jack" scheme, and as a result, these jacks are called the line *multiple jacks*. In fact, the whole array of them is called the *line multiple*.[19]

9.1.5 *The answering jacks*

Any given line is connected both to a number of jacks in the line multiple and to one jack in the answering jack area (lowest on the switchboard), in front of one operator position.

When the handset is lifted on an idle telephone set, the flow of DC current operates a relay associated with the line, which lights a lamp above the line's answering jack.

9.1.6 *Principle of call handling*

When a calling subscriber lifts the handset, the answering jack lamp for the line lights. The operator in front of that jack appears picks an idle cord circuit on her shelf and inserts its back cord into the jack. She operates a locking talk key on that cord circuit, which connects her own telephone set to that cord circuit, so she now can converse

---

[18] Each jack is not marked with the entire number, only the last two digits, but each group of five jack strips (for 100 lines) is marked with the higher-order digits of the numbers on the strips in that group.

[19] In a switchboard serving 10,000 lines, with perhaps 45 operators, there may be about 150,000 jacks in the line multiple!

with the calling party. She gives that iconic invitation, "Number, please."

The caller gives her the desired number. The operator takes the back cord of the cord circuit and plugs it into the jack labeled with that number. (Yes, she may have to use her "boarding house reach" if that jack is actually in front of one of her adjacent colleagues.) She operates another key on the cord circuit (this one non locking), which applies ringing current through the front cord to the called line. This call is underway. She restores the talking key on this cord circuit (taking her telephone set out of the picture) and goes on to handle the next call.

9.1.7 *But . . .*

Now, what of the called line is already busy on another connection (set up through another jack on the line someplace else in the switchboard)? What if the called subscriber doesn't answer after the first ring? How does the operator know when, and if, the called subscriber has answered? If the call is answered, how does she later know that one of the communicating subscribers has hung up, ending the call? What if the desired line is served by another central office?

These all have fascinating answers, but they have little or nothing to do with the story here, so I won't answer them here.[20]

9.2 Multi-Party lines with manual switchboards

There were two basic schemes for the working of multi-party lines with a manual switchboard, called *jack per line* and *jack per station*.

9.2.1 *Jack per line operation*

Here, as the name suggests, each **line** appears on a jack in the operator's line jackfield (actually, on several jacks, spaced along the length of the switchboard, so that any operator handling a call to that line could reach one of its "appearances"—the "line multiple" concept).

In this, some form of "party suffix" numbering scheme was most commonly used.

For example, suppose, in a code ringing context, the operator is working a call to 3249R2. She would plug the "called party" cord of

---

[20] Readers who really want know about these things are commended to the companion article, "Manual Telephone Switching", by the same author, probably available where you got this one.

the cord circuit she is using for this call into the jack for line 3249, and pull the ringing key twice.

Now consider a switchboard working on a four-party full-selective basis. A switchboard catering to this mode has four pushbutton ringing keys, marked J, M, R, and W on each cord circuit. (Usually. See however Appendix C for a prominent exception.)

Suppose the operator is working a call to 6765J. She would plug the "called party" cord of the cord circuit she was using for this call into the jack for line 6765, and press the "J" key on the cord circuit to apply the "J" ringing signal to that line.

(We do not see such keys on the switchboard in figure 9, which is not equipped for jack-per-line four-party operation. There we only see the usual lever-type ringing key.)

On a call to an individual line (no party letter), the operator would just always press whichever of the four keys sent "normal" ringing (ringing voltage on the ring conductor, ground on the tip, -48 V DC component).[21]

9.2.2 *Jack per station operation*

This was primarily used for two-party lines with divided ringing (which was very common in the Bell Telephone System). Each station has its own telephone number, and the two need not be related in any way. Suppose the number for the "ring" party was 2490, and for the tip party, 1528.

Before we proceed, recall that earlier I pointed out that, in divided ringing, the same electrical signal can be applied to the line for either party if the connection to the line is just "reversed" for a call to the tip party.

The main distributing frame (MDF) of a central office is where pairs in subscriber line cables are "cross-connected", via semi-permanent connections called *jumpers*, to the jacks (strings of jacks actually) for the telephone numbers for the lines currently served by each pair. This is put in place when service is established for that line.

In the case of jack per station operation for two-party lines, two jumpers run from the terminals on the "cable pair" side for the pair carrying this line. For our example, one goes to the terminals on the

---

[21] No, I don't remember which one that was, and in fact it might have been different for different companies. (See footnote 13.)

"telephone numbers" side that lead to jack string 2490, and a second one to the terminals that led to jack string 1528.

But this second jumper is "turned over", such that the tip of the cable pair ends up connected to the ring of the jacks and vice-versa.[22]

Figure 10 shows this arrangement.

The jumpers (which are semi-permanent[23]) are shown with heavier lines. All the other wiring shown is permanent. The sleeve leads are not shown as they are not pertinent to this discussion. Note the lines extending upward from each jack, reminding us that there are several jacks connected in parallel for each number (this is the "line multiple").

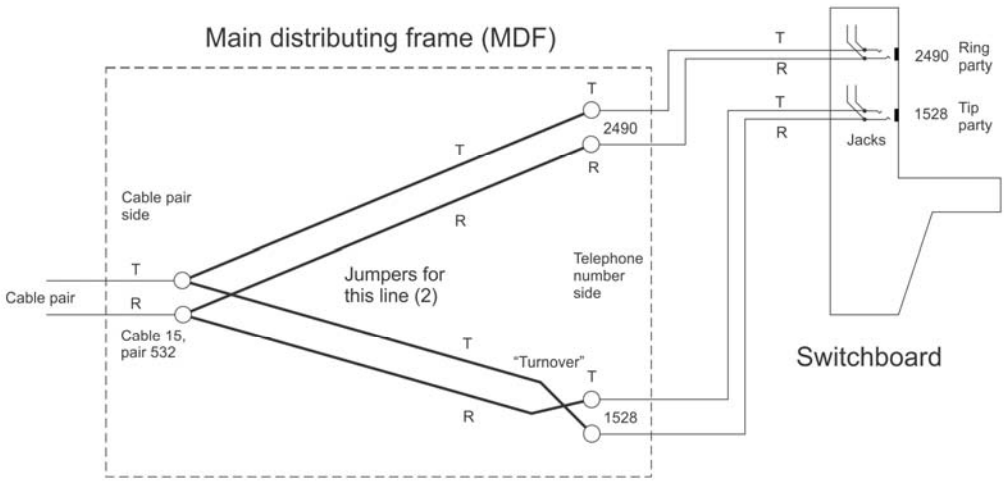

Figure 10. MDF jumpers for a two-party line

Suppose the operator is working a call to telephone number 2490. She plugs the calling cord into the nearest "2490" jack, and rings the line in the usual way.

By that I mean that. although we often think of this (in the context of individual lines) as "applying the ringing signal from tip to ring", what actually happens is that the ringing voltage (considered as against ground) goes out on the ring conductor, while the tip conductor is

---

[22] The convention is that the normal jumper tip-ring color code is in both cases observed at the "cable pair" end, "turnover" being at the telephone number end. The famous old joke is, "Gee, boss, I turned the jumper over at both ends just to be sure, but the tip party still doesn't work right."

[23] They are put in when service is established and usually left undisturbed until there is a change in the service.

grounded. Were this in fact an individual line, the ringer would have been connected between tip and ring, and would be activated.

But this is a two-party divided ringing line. At the ring party station (whose number is 2490), the ringer is connected between the ring conductor and ground. But since the "ordinary" ringing actually puts the ringing voltage on the ring conductor, the ringer at this station rings anyway.

At the "tip party" station (whose number is 1528) the ringer is connected from the tip conductor to ground. In this case there is no voltage there to operate the ringer at that station.

Now, consider instead the operator handling a call to telephone number 1528. She plugs the calling cord into the nearest "1528" jack, and rings in the usual way.

As always, this means that ringing voltage is applied to the ring of the plug and ground to the tip. But because of the "turnover" in the jumper for this number, what actually happens is that the ringing voltage goes out over the tip of the subscriber's line, and ground goes out over the ring.

Of course, at the tip party station (the one being called), its ringer is connected from tip to ground, and the voltage on the tip activates that ringer. At the other (ring party) station, the ringer is connected from the ring conductor, which now carries ground, to ground, so that ringer does not ring.

Is that clever or what! And note that there is no special hardware of any kind required to do this.

The line is connected to a single line circuit, with a single answering jack and line lamp (by way of another jumper not shown here). When the subscriber at either station lifts the handset, that line lamp lights, and the operator at the position where it appears answers it. The operator doesn't know which party is making the call, (but in any case she would not know what "number" the call is from[24]). And she doesn't really care, unless there is a charge to be made for the call, in which case she asks the caller for their number.

---

[24] The answering jacks are not "labeled" with the telephone number, even in the case of individual lines.

9.3 Multi Party lines with early automatic switching systems

9.3.1 *Two basic schemes*

When we consider automatic ("dial" switching) systems, there are again two basic schemes, called *terminal per line* and *terminal per station*. Not surprisingly, they conceptually parallel the two modes we spoke of just above for manual switchboards.

9.3.2 *Earliest electromechanical systems*

In the case of the earliest widely-used electromechanical systems[25], each physical "destination terminal" of the switching system has a fixed association with a telephone number. We will proceed on the basis of such a system.

9.3.3 *Terminal per line operation*

Here, each line (whether an individual line of a multi-party line) is connected to a single terminal of the switching system, and thus perforce has only a single (basic) telephone number.

Telephone numbers for individual lines and those for multi-party lines are assigned in different hundreds bocks, and (in the step-by-step system being assumed here) each hundreds block is handled by a separate bank of switches in the "last stage" of the switching system.[26] In that system, in the switches serving numbers in an "individual lines" hundred block, the last two digits of the dialed number in fact directly moves the last switch to the "terminal" for the dialed telephone number (these switches have 100 output terminals, and they all correspond to numbers in the same hundreds block).

In the switches for a "multi-party" hundredsr block, this is still all true, but in addition that last switch is arranged to expect a third digit, which sets the type of ringing to be sent over the line.

If the telephone number, in the directory, had a party suffix digit, it is just dialed after the rest of the digits. The step-by-step system never counts the number of digits dialed. It just uses each one to set one switch in the overall chain (until we get to the last switch, which is set by two digits, and in the case of a switch serving multi-party line numbers, then waits for a third digit to set the kind of ringing).

---

[25] Notably, the "Strowger" system, known in the Bell Telephone System as the "step-by-step" system.

[26] Step-by-step aficionados will realize that these are the *connector* switches.

Thus if the last part of the telephone number was 2368 (which is in an individual line number hundreds block, 23), the digits 2 and 3 brings the call path to a final switch in a set devoted to numbers starting with 23, which are always individual line telephone numbers. It uses the digits 6 and 8 to set the switch to its terminal 68, which is for the line with telephone number 2368. And that switch then applies regular ringing.

Now consider the case where a call to a number shown in the directory as 5843-2. The caller dials 58432. The line telephone number 5843 is in a hundreds block (58) devoted to multi-party lines.

The digits 5 and 8 bring the call path to a final switch in a bank devoted to numbers starting with 58, which are always multi-party line telephone numbers. It uses the digits 4 and 3 to set the switch to its terminal 43, which is for the line with telephone number 5843. But (because it is a "multi-party" switch) it waits for one more digit, and when that digit (2) arrives, the switch applies the proper ringing signal for "party 2" (whatever that is, perhaps a certain frequency in frequency-selective ringing).

The same scheme is used with the J, M, R, W suffix numbering scheme. In this case, the "extra" digit is always 5, 6, 7, or 9, and the ringing applied is one of the four "four-party full-selective" electrical signals.

9.3.4 *Terminal per station operation*

This was used with numbering schemes where each party has a different telephone number, basically independently assigned. We will first discuss it in the context of a two-party line using divided ringing.

The principle is exactly the same as in *jack per station* operation of a manual switchboard. Here the terminals of the final switches are exactly analogous to the jacks in the manual switchboard's line multiple.

As in the manual switchboard case, for a two party line, two jumpers are placed in the MDF from the terminals on the "cable pair" side for the cable pair serving the line. They go to terminals on the "telephone number" side that are connected to terminals of the final switches for the telephone numbers of the two parties, with the one to the terminals for the number of the tip party "turned over". The rest of the story is the same as was described for basic jack per station operation with a manual switchboard.

This can be extended to four-party full-selective operation. In this case, all “positive” stations (those for which the ringing signal has a positive DC component) have numbers in certain hundreds blocks.

The final switches serving these numbers are just like any others except that the ringing voltage with which they are supplied has a positive, not the normal negative, DC component.

At the MDF, there are now four jumpers from the terminals for the incoming cable pair that carries this line. They go to terminals associated with the assigned four telephone numbers (but two of these numbers must be in the range dedicated to “positive” stations, and two in the regular range, which is suitable for “negative” stations).

Of course, for the two parties in either number range, one jumper (for the ring party) is connected the normal way, and the other (for the tip party) is connected “turned over”.

The rest of the maneuver should be apparent.

If the telephone company runs into a VIP customer (with an individual line, of course) who just has to have a “vanity” number (maybe he wants his number to “spell” his name) that is in the “positive” range, what can they do? Well they can just assign a number in that range. When the subscriber’s station, equipped with the normal “ringer and capacitor from tip to ring” setup for an individual line, receives the ringing signal with a positive DC component (rather than the more usual negative component), it will ring just fine—because of the capacitor, the polarity of the DC component is not in any way “felt” by the ringer.

9.4 Multi-party lines with later electromechanical switching systems

9.4.1 *The panel dial system*

The panel dial system, introduced in about 1920, was used by the Bell Telephone System in large metropolitan areas. It uses a system or motor-driven switches that were not moved directly by the pulses from the caller’s dial, one stage (until the end) per digit, as in the step-by-step system. Rather the switches are controlled by “common” complex relay circuits which receive the entire dialed number and then control the successive switching stages to build up the connection.

Nevertheless, the terminals on the final switching stage[27] still, as in the step-by-step system, have a fixed association with telephone numbers.

Accordingly, multi-party lines were most often operated on essentially a terminal per station basis. The details, especially in the case of four-party lines, are much like what we already saw. [28]

9.4.2 *Crossbar switching systems*

The next generation of the electromechanical switching systems were the *crossbar* systems. In these, the terminals of the final stage of the switching system did not have a fixed association with telephone numbers. Rather, that association was established by what we would today call "look-up tables" (they were said to provide "translation" of a telephone number into a terminal address) defined by jumpers (they did not carry telephone circuits) on a special field of terminals. The advantage, among others, was that in this way, the assignment of lines to different terminals could be optimized from a traffic load basis.

Multi-party lines in these systems are operated on a terminal-per line basis. Nevertheless the several party stations can have independently (and freely) assigned telephone numbers. For a two-party line, the translation table would, for both telephone numbers, "return" the same terminal address. In addition, the "return" from the table included an indication of which ringing signal (among up to four) should be used for that "party". The details of execution are beyond the scope of this article.

9.4.3 *Electronic switching systems*

Electronic switching systems, software-controlled, operated multi-party lines in a way that is conceptually identical to that described above for crossbar systems (although the details of execution are dramatically different).

---

[27] Known here, fittingly, as the *final* frame.

[28] In that system, the ringing is applied by the switching stage before the final stage (the *incoming* stage), and when four party full selective service is used, it will apply the proper flavor of ringing signal (with respect to the DC component) depending on whether the number is in an even or odd numbered set of 500 numbers (which is in fact the scope of a particular final switch in that system).

10 NOISE CONSIDERATIONS

10.1 Balanced transmission

The transmission of speech signals over telephone circuits is almost invariably on a *balanced* basis. Identical AC voltage waveforms, but of opposite polarity, (as we would measure them with respect to ground) exist on the two conductors of a circuit, leading to a net signal voltage as observed from one conductor to the other. It is of course this voltage from one conductor to another to which the receiving part of the telephone set responds.

We can also think of the current aspect of the speech signal. Identical current waveforms exist in the two conductors, in opposite directions on the two conductors (thus the current travels "around the loop"). We can think of this current "around the loop" as that to which the receiving part of the telephone set responds from a current point of view.

10.2 AC induction

If the telephone pair passes through a region where there is a significant AC magnetic field (perhaps near a large motor), an AC voltage will be induced in both of the two conductors by *electromagnetic induction*. This is described as a *longitudinal voltage*, as it appears "along the circuit", as contrasted with the actual speech signal voltage, which appears "across the circuit" (that is, from one conductor to the other).[29]

So we might expect that, in this context, the speech signal voltage, as contrasted with a *longitudinal* voltage, would be called a *transverse voltage*. But in fact, it is often called a *metallic voltage*, that coming from the fact that it exists "between the (metal) conductors", rather than with respect to ground.

Because the two conductors of any circuit follow almost the same path (they are, for example, typically in a "twisted pair"), the induced voltages induced in the two conductors will be nearly the same, and so the resulting voltage from one conductor to the other (the metallic voltage) will be zero. It is of course the metallic voltage to which the telephone set transmission circuit responds, and thus there we hear no sound from the AC induction.

A similar situation exists when there is capacitive coupling (electrostatic induction) between, for example, a power conductor and

---

[29] Instrumentation engineers will recognize this as a *common mode* voltage.

a telephone circuit. It serves to “inject” current into both conductors, in both in the same direction. This does not constitute a current “around the loop, to which the telephone set would respond.

Thus, the “balanced” mode of transmission provides immunity against the effect of either electromagnetic or electrostatic induction from an “interfering” source.

10.3 An artificial “imbalance”

Now suppose that, as a “thought experiment”, we connect a resistor (in series with a capacitor, so there is no disruption of the DC signaling) from one conductor of the pair to ground at our telephone station. This will cause a greater current to be drawn by our resistor from the induced (longitudinal) AC voltage on that conductor than on the other conductor.

Thus there will be a greater voltage drop through the conductor resistance for the induced spurious AC voltage on that conductor than on the other conductor. So the spurious voltages “with respect to ground” will no longer be the same, there will be a net spurious voltage between the conductors (a spurious metallic voltage), and we will probably hear that as a spurious audible signal. The most common manifestation is as a “hum” with fundamental frequency 60 Hz, but perhaps accompanied by harmonics if the source of the induction is not a pure sine wave, often the case.

This phenomenon is aptly called *longitudinal to metallic conversion*. And clearly, if we are not to cause it, we need to avoid having any path to ground on one side of the line, or at least one that is not matched by an identical path on the other side.

10.4 Enter divided ringing

Of course, in reality, there is not (we hope) any such resistive path to ground from one side of the line. But with divided ringing, there is a ringer circuit from one side of the line to ground at one station, and from the other side of the line at the other station. If both of these have the same impedance, and are at essentially the same place along the overall circuit, the phenomenon discussed above will be symmetrical with respect to the two conductors, and there will be no net metallic voltage resulting from the induced AC voltage.

But in fact, we might have at one station two ringers and at the other station one, or the ringers may be of different types, or the two stations may be connected to the pair at different points along its overall length. So their effects may not be identical.

The result is that there may be residual longitudinal to metallic conversion, possibly resulting in an audible spurious signal.

But suppose that we make the impedance of the ringer circuit (at audible frequencies) very high. Then the underlying phenomena are all very small, and any difference between them is thus negligible. How might we do that?

We could put an inductor, with a high impedance at speech frequencies, in series with the ringer itself. But wait—the ringer coil **is** an inductor, with a substantial inductance. And so the problem is automatically solved. (Design considerations relating to this are discussed in Appendix A.)

One might have thought that a more foolproof way to avert longitudinal to metallic conversion when on a connection (the only) time it would be of concern) would be, in stations using divided ringing, to have a switchhook contact that, with the phone off-hook, would open the path through the ringer to ground.

In fact, the 500-series telephone set, introduced in 1950, had a switchhook contact that might seem to have been intended for just that purpose. But it was not employed that way.

10.5 If that doesn't do it

In some special situations, the level of induced longitudinal voltage is so great that even the clever ploy described above does not sufficiently reduce the audible noise. In such case, a small electronic circuit board is added to all the telephone stations sets on the line. It includes two back-to-back SCRs, in series with the ringer itself.

When the telephone set is not in a ringing situation (including when it is actually on a call), the SCRs are "open", interrupting the path through the ringer to ground, completely preventing the possibility of longitudinal to metallic conversion.

When a ringing signal intended for a station arrives on the line, the high voltage, conducted through a small capacitor, "fires" the SCR's, completing the path to the ringer, which then responds. But after each ringing cycle, the SCRs "open" again, so we cannot have longitudinal to metallic conversion during the actual connection.

This accessory is called a *ringer isolator*.

11 PARTY IDENTIFICATION

11.1 Introduction

An important option for residential subscribers through much of the Bell Telephone System (and elsewhere) for quite a while was *measured rate service*. Here, all completed outgoing local calls are counted. The subscriber each month pays a surcharge for each such call over a basic allotment. This was an alternative to *flat rate service*, in which completed local calls are not counted, and there is no "per call over the allotment" surcharge.[30] [31]

The basic motive was to be able to offer basic telephone service at a lower rate, which was practical because message rate subscribers generally made fewer calls and thus contributed less to the overall load in the local network, which incrementally reduced overall capital expenditures. (And if they did make a lot of calls, that generated extra revenue.)

The normal mechanism for keeping track of the number of completed local calls made by each message-rate subscriber was to count them on individual electromechanical counters, called *message registers*. These were mounted *en mass* in equipment cabinets. Except in the very smallest offices, each month these were photographed by special cameras with a hood-like front end that embraced a large rectangular field of the message registers.

The developed negative films from these photographs were read by clerks in viewers much like those used for microfilm or microfiche documents, and the readings entered into the records (eventually by way of punched cards). The registers were not reset after reading; the accounting was done on a "differential" basis (just as for a water meter).

Now, how were these message registers "triggered" for each completed call? I'll focus on automatic switching (although there were well-developed practices for manual switchboards), and in particular on the older, electromechanical, switching systems.

---

[30] In fairly modern times, the telephone companies tried to eliminate message rate service, and greatly succeeded. Then, even more modernly, the concept of "usage-sensitive pricing", essentially the same thing, was introduced. "What goes around comes around."

[31] Flat rate service was often called by the general public "unlimited" service. Message rate service was the norm for middle-class residential subscribers in my boyhood neighborhood. If one of the gang had "unlimited" service, he was considered at least "sort of rich."

In the switching path, when a call is completed (that is, is answered) the equipment sent back to the "line circuit" (the line's "port" to the central office) either a ground signal over a separate message register lead for the line or a high-voltage pulse over the sleeve lead[32], which triggered the line's message register.

Before I move on, I mention that of course in more modern types of central office, the recording of calls is not done on message registers but rather by recording into a data system.

11.2 Tip party identification

Now suppose that the line is a two-party line. In terminal-per-station operation, calls incoming to the line arrive over two separate "terminals". But, with respect to placing calls, the line is connected to a single line circuit, which detects the subscriber's "off hook" and prepares the switching system to accept the subscriber's dialing.

Assuming that both subscribers have message-rate service, there must be two message registers associated with the line. How does the switching "chain" trigger one or the other? (I won't really discuss that, but we can think in terms of positive and negative pulses on the sleeve.) More to the point, how does it know which party on the line is placing the call so it can trigger the proper register? This is the issue of "party identification". The scheme most commonly used by the Bell Telephone system is called *tip party identification*.[33]

Recall that normally, whether the telephone is idle or on a call, there is no DC path to ground at the station.

But, with the tip party identification scheme, when the tip party telephone set is off-hook, there is a high-resistance path from the station to ground. At one point in the handling of the call, the switching equipment tests for such a path and, if one is found, it remembers that "this call is from the tip party station". Then, if the call is completed, the equipment sends back to the line circuit the signal that says "trigger the second message register for this line". Otherwise the signal would be "trigger the first message register for this line".

---

[32] A control lead that, just as in manual switching, travels with the tip and ring leads through the switching system.

[33] This name comes from the way it works, which is to do something unique for the tip party. Of course it is really *party identification*!

11.3 Noise considerations

We saw before that a path to ground from one line conductor to the other could lead to longitudinal to metallic conversion of any AC induction, introducing noise into the transmission. What about that when we have a path to ground for tip party identification? Well, we deal with that in two ways.

Firstly, the path to ground is nominally run from the "electrical centerpoint" of the telephone set's transmission circuit (the circuit that couples the transmitter and receiver to the line).[34] As a result, any current in that path (propelled by a longitudinal voltage, perhaps from AC induction) will be injected equally into the tip and ring conductors. This is (ideally) a "perfect" longitudinal current, and assuming there is no other asymmetry in the situation, will be benign.

But alas, this is not always perfect, one reason being that the transmission circuit of the telephone set can't reasonably be made symmetrical, so it can't really have an exact electrical centerpoint.

So to finish the job, we could include a high inductance in the tip party identification DC path to ground. This would have a high impedance to any spurious AC currents, and thus would greatly reduce their magnitude, almost completely alleviating the problem..

Very clever. But this would mean, for the tip-party telephone sets, an additional component, one that is relatively bulky, heavy, and expensive (it would, for example have to have a laminated core of special magnetic material).

But wait. We already have just such a thing in the telephone set, the coil of the ringer. As we saw earlier, It indeed has a high inductance.

So, at a tip party station, with the telephone set off hook, the ringer coil itself (hijacked for this purpose) is connected from the more-or-less centerpoint of the transmission circuit to ground, providing the DC path to work the tip party identification system.

---

[34] In the 302-type telephone set, the workhorse of the Bell Telephone System in the 1930s and 1940s, there was no "centerpoint" of the transmission circuit. But for the tip party on a two party line, an identical-appearing 304-type telephone set was used instead. Its transmission transformer had an additional terminal, connected to a tap on one of the windings. This provided an approximate centerpoint of the transmission circuit. It also had a more elaborate switchhook, needed for proper operation in the "tip party identification" mode. When the 500-series telephone set was introduced (about 1950), a common transmission circuit was used in all varieties, and it had a terminal that was an approximate centerpoint.

Again, its inductance minimizes the flow of any spurious AC currents which could cause noise.

11.4 Circuit details

In fact, the resistance of the entire ringer coil is usually higher than we want for this purpose. So in reality, only part of the ringer coil winding is usually used (the coil being made in two sections, or provided with one or more “taps”, for the purpose).

Figure 11 shows the basic arrangement.

Here, I use the inductor symbol for the ringer coil to emphasize its electrical properties (both in this situation and in the two-party divided-ringing case). We see that a part of the ringer winding (having the appropriate resistance, but still exhibiting a substantial inductance) is used as the path to ground for tip-party identification.

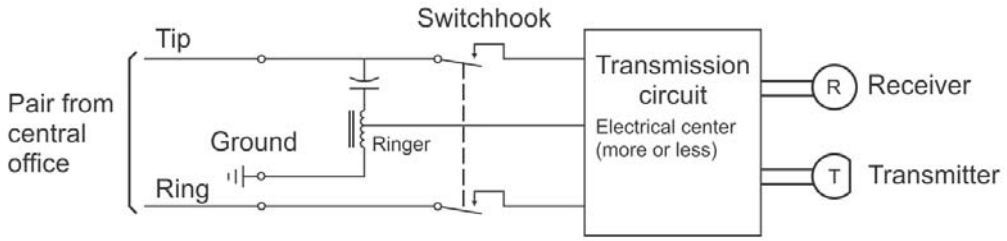

Figure 11. Tip party station with tip party identification

In this set, the switchhook has two line contacts, one for each side of the line. This is needed so that the tip-party identification ground path does not provide a DC path to ground with the set idle.

As we got into *automatic message accounting* for customer-dialed “extended area” calls (with extra charges), and then later into nationwide dialing, the station identification scheme gained new duties. The tip party identification scheme was successfully employed for this purpose.

What about, for example, stations on a four-party line? There is no station identification scheme for such in widespread use (although of course a zillion of them have been patented). When a subscriber on a four-party line direct dials a “long distance” call, an operator at a special console is brought momentarily onto the connection to ask, “What is your number, please?” The caller, not fully paying attention, then often gives the number they are **calling** (which they of course have already dialed). The operator sees that called number on her display, knows that it is not the caller’s number, and says, “What is **your** number?

Interestingly enough, in the 500-series of telephone sets, when wired for tip party identification, the switchhook contact mentioned in section 10.4, when the set was off-hook, opens the actual "ringing" path through the capacitor to the ringer coil to avert a more subtle potential noise problem.

12 THE DEMISE OF MULTI-PARTY SERVICE

By the 1960's, interest in multi-party service declined, as most subscribers did not care for the limitations, and over the next while, many telephone companies gradually phased it out.

In the early 1970s another factor brought this kind of service almost completely to an end. The telephone companies' policy of not allowing the subscriber to provide his own telephone sets came to an end as a result of various matters (including some pivotal law suits).

Standard interfaces to subscriber telephone lines (known as "registered jacks, with the infamous "RJ" designations) were defined so that one could buy a telephone set at any handy store and successfully connect it to one's telephone line.

These interfaces made no provision for multi-party operation, either in signaling (the specifications for example prescribed that the ringer be connected from tip to ring, and not be frequency-selective) or party identification (you could not buy a at Radio Shack or the drugstore a telephone set that had the tip-party identification circuit arrangement, and certainly not one with a frequency-selective ringer). So essentially only multi-party lines where the subscriber was OK with the telephone company providing the telephone sets could continue to exist.

On a parallel front, certain subsidies afforded to the telephone companies after the restructuring of the industry (at the time of the dismantlement of the Bell Telephone System) were not applicable to multi-party lines, so the companies had another motive for trying to get rid of them.

In any case, the telephone companies had for quite a while moved away from offering this kind of service (other than perhaps in rural areas), and in fact, by the 1970s (in the U.S.), regulatory and policy developments and the ensuing practical considerations, together with economic and market shifts, brought nearly its complete demise as to general use.

So this long and fascinating chapter of telephone technology and practice came to a sort-of graceful end (at least in metropolitan and suburban areas). For many years it had served, through very clever

techniques, an important economic purpose in American life. *Sic transit gloria mundi.*

On the other hand, some of the techniques themselves got new lives, as with the use of code ringing (see section 7.2) to allow for the automatic activation of a fax machine on a line normally used for voice calls. A second number was used that gave a "distinctive ring" recognized by the fax machine, as if it were a second station on a line with code ringing[35]. That was in fact perfectly compatible with the registered jack doctrine.

This functionality was not offered by the telephone company as a peculiar use of a two-party line, but just as what it was—a second number for the line, giving distinctive ringing, with a small monthly charge.

But of course today fax machines, in that usually-residential setting, are essentially obsolete.

Some families used the arrangement so that, with only one telephone line, the daughter could have a separate number, and calls for her would be recognizable by the different ringing cadence (in general just "two rings") so the parents would know not to answer. But of course today she has her own iPhone. And of course today many people don't even have a conventional telephone line at all (I don't).

13 ISSUE RECORD

Issue 5 (this issue): The information on attaining a sufficient inductance in ringer electromagnets was been made more accurate and related.

Issue 4: Extensive revisions. Addition of Appendix A and Appendix B.

Issue 3: The discussion of noise considerations in connection with divided ringing and tip party identification was expanded and refined. Many parts of the discussion of the operation of manual switching systems, not vital to the story here, were condensed or deleted. Numerous other editorial adjustments were made.

14 ACKNOWLEDGEMENT

Thanks to Carla Kerr for her careful and insightful copy editing of this article in its early issues. Any errors in this issue are wholly my responsibility.

---

[35] Yep, "That's my ring."

And thanks to the British Columbia Telephone Company for their taste in hiring telephone operators.

#

Appendix A
About the ringer

A.1 Introduction

A major player in most of the matters described in this article is the telephone ringer, yet I have not said much about it. But I will now.

Most of the electrometrical ringers used over the years in the telephone industry (of course "electronic" ones have been common for many years now) have followed the basic concept (and, until about 1950, the same basic mechanical configuration) of the ringer designed in 1879 by Thomas A. Watson—yes, the famous assistant to Alexander Graham Bell. We see it in figure 12.

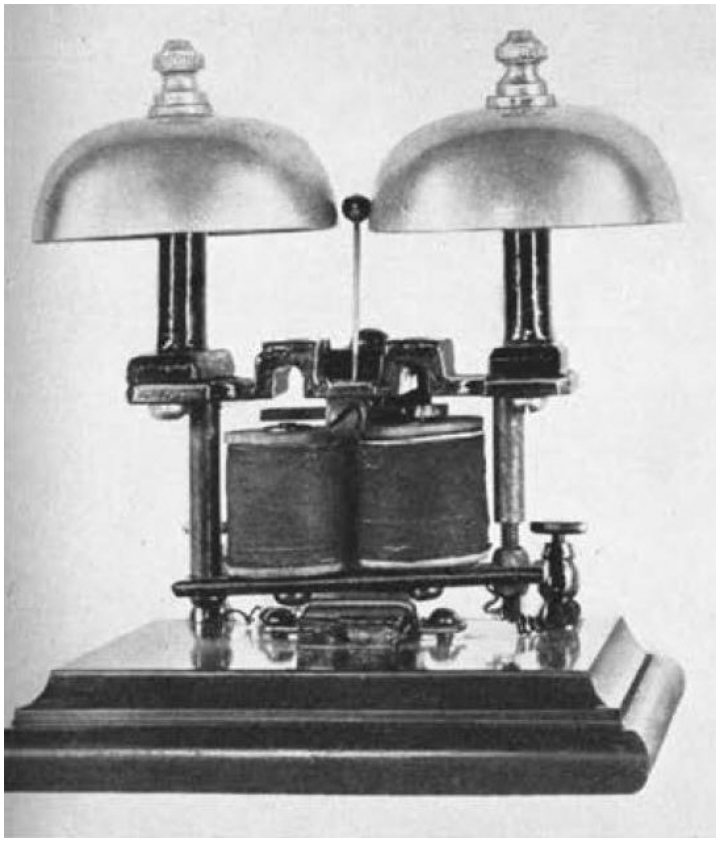

Figure 12. Watson ringer (*ca*.1979)

Folklore has it that Bell, himself focused on the basic matter of electrical transmission of speech, realized that if this were to lead to a useful facility, there would need to be some way to tell the other party that he should come to the telephone, and essentially told Watson, "Will you please take care of that." And he did.

We will see actual modern ringers in section A.3, after we have heard of some of the properties we wish them to have.

A.2 Properties and behavior

In other than frequency-selective ringers, the magnetic field caused by the permanent magnet also makes the armature want to stay at one end of travel or the other when there is no current through the coil.

In the earliest telephone systems (whether two-station point-to-point "intercom-like" systems or, later, "exchange" service via manual switchboards), there was no DC voltage on the line. The ringer coil was directly connected between the two line conductors. With no DC voltage present, there was no current through the ringer when the line was inactive.

But soon, telephone exchange service moved to "common-battery" operation, in which there was a DC voltage across the line, even when idle. This provided the energy to power the transmitter ["microphone"] in the telephone set, which was of the variable resistance type, and as well made it possible for the switchboard to know whether the set was "off-hook" or not. Of course, then a ringer coil permanently connected across the line would, for one thing, result in a continual waste of energy, but more importantly, would greatly interfere with the "supervisory signaling".

The solution, of course was straightforward—a capacitor in series with the ringer coil. It needed to have a fairly low impedance at the ringing frequency (usually 20 Hz), so a fairly large capacitance was needed (at first often several microfarads),

Bu there was a fly in this ointment, a bit of a problem under manual operation and a serious difficulty under dial operation (and I will describe that branch of the dilemma).

A telephone dial (at least before the onset of "tone dialing") works by interrupting the continuity of the line (and thus the current through it) in a series of pulses—2 "open" pulses for the digit 2, for example.

When the dial "pulsing" contact opens, the voltage across the line jumps from a few volts to 24 or 48 volts. This produces a current pulse through the ringer coupling capacity as it charges to this new voltage. When the contact closes again, another pulse of current is caused as the capacitor discharges to the lower voltage. Each of these current pulses can cause the ringer motor to move from one of its stable positions to the other, causing a "ding" (for one direction) and a "dong" (for the other). The phenomenon is called "bell tapping".

But in fact, this phenomenon is not (as I e perhaps suggested so far) symmetrical. Because of the inductance in the relay at the central office that feeds battery to the like while dialing is going on, when the

dial contact opens, the voltage across the line will not just rise to 24 or 48 volts, but will in fact have a brief "spike" to a substantially greater voltage. Hold that thought.

In any case, we avert the bell tapping phenomenon in the following way:

- We add to the ringer a spring that holds the ringer armature assuredly at one limit of its travel when there is no current. This is called a *bias spring*. Now, a spike in one of the two possible polarities (no matter its amplitude) will cause no motion of the armature (it is already "as far in that direction as it can go").

  And a spike in the other direction (if its amplitude is not too great) will not make the armature move either—its propulsive effect will not be enough to overcome the combined force of the magnetic effect that retains the armature against either end of its travel and the force from the bias spring.

- Then, we connect the ringer circuit across the line with polarity such that the larger "spike" (occurring when the dial contact opens) is of the polarity that would drive the ringer armature farther in the direction of the end where it is already is—thus it doesn't move.

  And the spike of the other polarity (when the dial contact closes) is of less magnitude, and thus is (we hope) not potent enough to overcome the magnetic effect, aided by the force of the bias spring. So the armature doesn't move then either.

I spoke in the body of the article about the fact that we look to the ringer to have a high impedance at audible frequencies (and, in fact, that is desirable at the ringing frequency as well), and thus a high inductance. So the design of the ringer electromagnet is influenced by that need. We will learn more about that as we look at actual ringer design.

A.3 Actual "modern" ringers

Figure 13 shows a more modern design, the B-type ringer developed for use in the 300-type telephone sets (introduced in 1937). This beauty was made in March of 1940.

This type of ringer has a "motor" that basically acts like a polarity-sensitive relay[36]. It involves a permanent magnet and a coil (in

---

[36] Often called in telephone and telegraph technology a *polar relay*.

the designs prior to 1950, generally a pair of coils). When the current through the coil is in one direction, the armature is driven in one direction; when the current is in the other direction, the armature is driven in the other direction. The permanent magnet is a critical ingredient in this behavior.

Figure 13. B-type ringer

In figure 13, the magnet is the gray "frame" surrounding the coil area. We might think we see here a squared-off version of the iconic "horseshoe" magnet configuration, with one pole at each end of the horseshoe. But in fact here one pole of the magnet is across the top (the welded-on piece) and the other is across the bottom. So it is really two magnets, poled the same way, side-by side but not close together, magnetically in parallel.

The coil spring is the bias spring I spoke of earlier. Its upper end is trapped in one of several notches in the phenolic plate (brownish) that forms the top "spool ends" for the two coils. It can be moved into different notches to adjust its force as needed.

In order that the electromagnet have the high inductance needed for proper performance, in this ringer the core is made of permalloy, a special nickel-iron alloy having a very high value of *magnetic permeability*, the property that influences how readily the material will carry a magnetic field.

During World War II, there was a great demand for permalloy for use in telecommunication transformers and other applications, so its use in non-military applications was essentially prohibited.

Thus, during that period, the cores of the electromagnet in B-type ringers were made of conventional magnetic iron, leading to a more modest inductance. In most situations, the performance compromise caused no difficulty. When it did, "Hey, there's a war on!"

These ringers had the same type marking as the normal ringers, but were identified by a red stripe on the coils. The plan was that, when the material limitations eased, and the ringers again would be made with the more-desirable permalloy cores, all "red-stripe ringers" would be replaced (especially in divided-ringing service). Of course that never happened.[37]

Figure 14. C-type ringer

In figure 14 we see the next generation, the C-type ringer developed for use in the 500-type telephone sets (introduced in 1950).

Here, we see the physical arrangements finally depart seriously from Watson's version and its descendants. The magnet is the cylindrical slug we see at the bottom of the figure (made of the potent

---

[37] I am sometimes asked by collectors about, for example, a vintage Western Electric telephone set carton, labeled "Set, telephone, 302C-3, with red stripe ringer."

permanent magnet material Alnico V). The armature is single-ended (sort of a “flap”), mounted on a flexible flat spring steel “hinge”. It travels between two pole pieces that are part of a single stamped and formed structure made of a suitable magnetic material. That structure is really the “subframe” for the “motor” part of the ringer.

The coil is wound on a rectangular cross section laminated core fastened across the magnetic “frame” with two screws. This core consists of a number of thin plates of a magnetic material, each with a thin coating of insulation (think varnish), stacked tightly together. This structure minimizes the creation of currents within the core itself (called *eddy currents*) caused by the AC magnetic field. These not only absorb some of the available energy in the system, but also serve to reduce the inductance (and thus impedance) of the electromagnet.

The vertical part of the “frame” we see at the left is a magnetic shunt. It carries part of the magnetic flux propelled by the field caused in the coil by the current through it. The remainder of the flux goes around the right side of the frame, passing across the armature gap; it is this that causes the force on the armature.

The reason for the magnetic shunt is to increase the inductance of the ringer, which as we heard plays a critical role in averting noise. And, handily, it completes the “box” shape of the magnetic frame to give it greater stability.

When the frame blank is stamped out of a sheet of magnetic material, a large hole rectangular is made in the center to accommodate the coil. But when the frame is being stamped out, the armature is also stamped out of the material in the center that would otherwise be wholly scrap.

Here the bias spring is hard to see, being behind the clapper arm. Its end is trapped in a one of two slots in a thin metal bracket, again thus being adjustable.

In the figure we see a subtle design feature: the clapper fits loosely on the clapper arm. This serves to provide damping to avert undesired vibration of the clapper arm.

Another unique feature of the C-type ringer is that the ringer gongs are each mounted over an closed hemispherical resonator (with ports in it). This increases the acoustic output, and emphasizes its fundamental frequency components for best audibility, with special concern for older folks, who might have some high-frequency rolloff in their hearing.

Yes, I am in awe of the Bell Telephone Laboratories people responsible for all this.

A.4 Frequency-selective ringers

Early frequency selective ringers usually followed the overall construction we see in figure 13, with a few important exceptions:

- The armature is not mounted on a pivot but rather on a flat spring. When there was no current through the coil, the spring held the armature in mid-stroke. The stiffness of the spring might vary depending on the frequency for which the ringer was intended to overate, but possibly being the same for more than one of those frequencies. There was no bias spring.

- The clapper itself was cylindrical, and varied in length (and thus mass) for different frequencies. The stiffness of the mounting spring combined with the mass of the clapper determined the frequency at which the armature-clapper assembly would resonate. Usually the position of the clapper on its arm was adjustable, providing as way to adjust the resonant frequency to the exact value intended.

- The stroke of the armature was limited so it never got near enough to a coil pole piece that it would “stick” to it because of the magnetic attraction.

Figure 15 shows a typical such ringer, this made by Automatic Electric Company, for years a major supplier of telephone sets and central office equipment to the non-bell world.

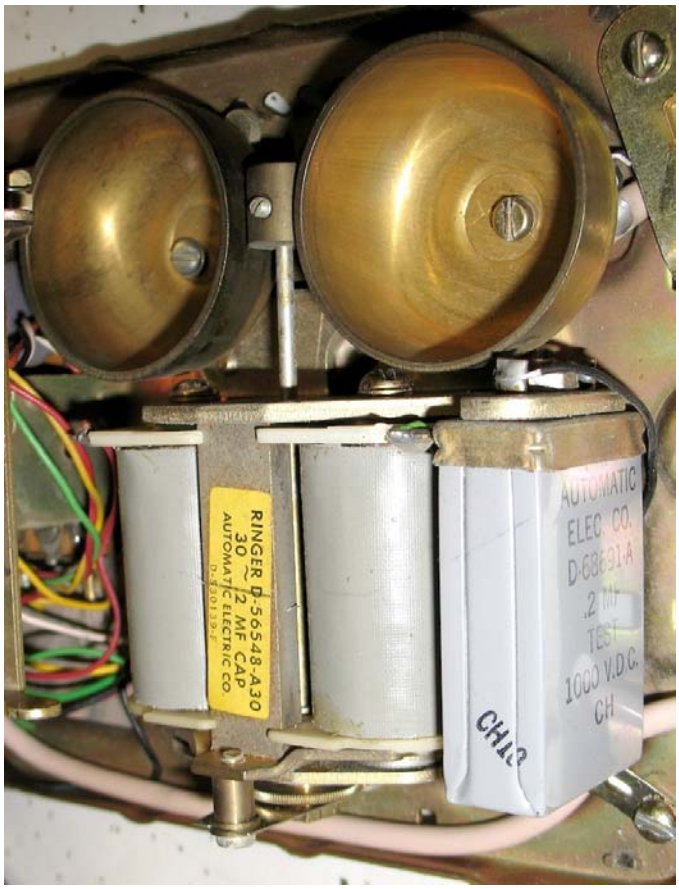

Figure 15. Automatic Electric Company frequency selective ringer

At the bottom we see the armature suspension spring, a flat torsion spring. The thin toothed wheel we see above it provides for adjusting the vertical position of the armature to get the proper gap with the coil pole pieces.

We note the setscrew holding the clapper on its arm so that the position can be adjusted so as to adjust the resonant frenecy of the ringer to the exact value intended.

Frequency selective ringers were also mode in the form factor of the C-type ringer. Figure 16 shows an ITT Type 156 frequency selective ringer.

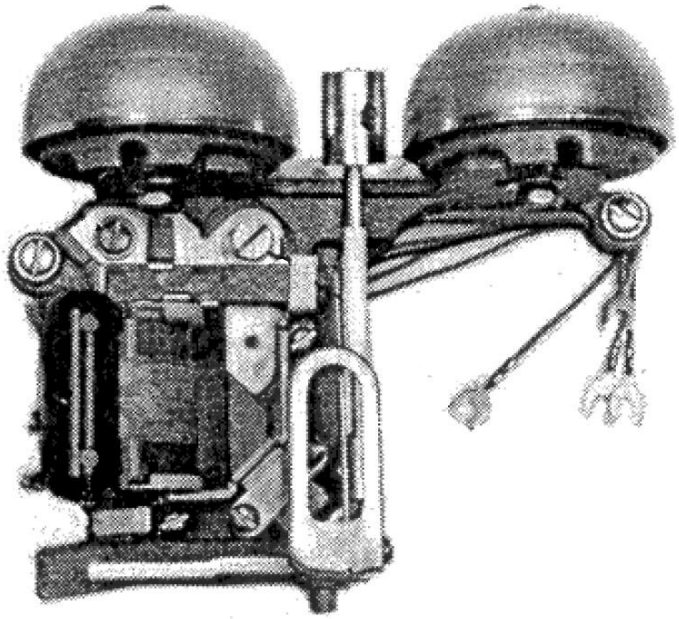

Figure 16. ITT Type 156 frequency selective ringer

This particular ringer series was available in all the frequencies shown in figure 4.

I note that the basic design of the C-type ringer, using a flat spring to mount the armature, is readily amenable to adaptation to a frequency-selective form.

-#-

Appendix B
The four-party full selective ringing system

B.1 Review

By way of review, we note that the four-party full-selective ringing system provided for selectively ringing the ringers at (only) the desired station on a four-party line by using all four possible combinations of these two "binary" attributes:

- Whether the ringing voltage was applied to the ring or tip conductor, "against ground", the other line conductor also being grounded. (The two stations for which this was the ring conductor were called the "ring stations", and the others of course the "tip stations".)

- Whether the DC component of the "superimposed" ringing voltage is negative or positive. (The two stations for which the voltage was negative were called the "negative ring[38] stations", and the others of course the "negative ring stations".)

B.2 The waveform

We will assume that, for a "negative" ringing signal, the ringing signal has an AC component of 75 V RMS and a DC component of -48 V. Then, the greatest positive excursion of the instantaneous voltage would be to +58 V, and the greatest negative excursion would be to -154 V,

B.3 Early implementation—common battery lines

The earliest implementation of this scheme was, seemingly, on "local battery" lines.

B.3.1 Test heading

The ringers here are of the type in which there s a bias spring to assure that the ringer, when not energized, has its armature in a certain one of the two stable positions. We recall that if we had current (of sufficient amplitude) in one direction through the ringer coil, it would cause the armature to move to the opposite position. If we had current of the other position, the armature would not move (it merely being urged more forcefully against its "stop").

---

[38] We note that this use of the word "ring" was not in the sense of the *ring conductor* but rather in the sense of the voltage polarity that wound make the ringer *ring*. Thus we have ample opportunity for confusion when we speak of, for example, the "tip negative ring station."

At each station the ringer (no capacitor being involved, (as is usual for local battery lines) is connected between one conductor or the other to local ground. At each station, the ringer is thus connected with such a polarity that its armature would be moved from its resting position by current of the direction that would flow from the DC components of that station's assigned ringing signal.

Now suppose that the operator, wanting to ring the party whose ringing signal was "ring/negative" would operate a ringing key that would apply voltage, from a bus carrying ringing voltage with a negative DC component, on the ring conductor of the line, grounding the tip conductor. The result at each of the four stations was (we will assume that the voltage at the station is the same as it was leaving the central office):

- Ring,/negative station: The ringing voltage appears across the ringer coil. The negative excursion of the waveform (to -154 V) will forcefully move the ringer armature away from its idle position to the "active" position ("ding"). The positive excursion of the waveform (to +58 V), combined with the force of the bias spring, will move the armature back to the idle position ("dong"). That is, the ringer rings.

- Ring/positive station: The ringing voltage appears across the ringer coil. The negative excursion of the waveform (to -154 V) tries to move the armature in the direction against its idle stop, so there is no movement. The positive excursion of the waveform (to +58 V) tried to move the armature away from its idle position. But this is resisted by the force of the bias spring as well as the tendency, caused by the permanent magnet, for the armature to "stick" in its idle position. Thus, the armature does not move at all. The ringer does not ring.

- Tip/negative station: Since in this case the ringing voltage is on the ring conductor, and the tip conductor (to which the ringer coil is connected at this station) is grounded, there is no voltage across the ringer coil. The ringer does not ring.

- Tip/positive station. The story here is the same as in the previous case. The ringer does not ring.

B.4 The next stage of evolution—common battery lines

Of course the preponderance of telephone lines in the Bell Telephone System were of the common battery type. Clearly the implementation described above for local battery lines would not work here. The ringer coils connected from the ring conductor to ground would cause the flow of DC current, which would disturb the supervisory signaling,

possibly giving a false off-hook indication to the central office when the station is on-hook.

So in this case, a somewhat more complicated implementation was called for. It its first stage of evolution, a relay, responding to ringing AC voltage, is connected through a capacitor across the tip and ring conductors at each station.

A make (normally open) contact on the relay is in the path from the appropriate line conductor to the relay coil and thence to local ground. The polarity of the ringer coil, as before, is as appropriate to the polarity of the SC component of the ringing signal assigned to that station.

With the relay released, the ringer is not connected in any way to the line. With the relay operated, the path to the ringer is completed.

When any of the four types of ringing voltage was applied (for a call to any of the stations), the relay operates at every station, connecting its ringer to the line. But, in exactly the same way described for local battery lines, only the ringer for the wanted station will actually sound.

There were several problems with this implementation, including:

- The type of relay used was "touchy", might well require adjustment in the field, and might not operate properly if not mounted in the desired vertical orientation.[39]

- The fact that all ringers were connected during ringing meant that all the ringers on the "live" conductor were fed ringing voltage, whether or not they would be activated, and thus contributed to current that callused voltage drop in the conductor, ultimately reducing the length of line on which this system could be used.[40]

B.5 Enter the gas triode

To overcome both of these problems, a new implementation was developed in. There, rather than using a relay to keep the ringer coil

---

[39] At the time this system came into use, "combined telephone sets (where everything was in the telephone set proper) were not yet in use. Rather, for these sets, the transmission circuit and the ringer (and of course, in the system I am describing, the special relay as well) were in a separate box (mounted on the wall or the side of a desk) called a *subscriber's set* (or often, later, just "subscriber set"). Yes, it's a very curious name.

[40] Yes, the same was true for magneto lines, but I didn't mention it there.

isolated until ringing actually occurred, a gas-filled triode tube was used. The “main gap” of the tube was in the path through the ringer coil from the “active” line conductor to ground. The “trigger gap” was connected from the “active” conductor to ground.

The trigger gap would fire on the “larger” peak of the ringing signal, but only if that were of the polarity corresponding to the polarity of the DC component of the signal assigned to that station, and thus only at the wanted station.

When the trigger gap fired, it prompts the main gap to fire, and thus the ringing voltage (that is, one half cycle of it) would be led to the ringer. The ringer was connected with such a polarity that these peaks moved the armature from the ideal position to the “active” position (“ding”). At the end of that half cycle, the current through the coil path dropped, the main gap of the tube was extinguished (it requires current flow to keep it ‘lit”), and the bias spring brings the ringer armature back to its rest position (“dong”).

Nothing at all happens at the other stations.

In non-combined telephone sets, the gas triode is mounted in the subscriber set (where the relay earlier went). And later a smaller gas triode was developed that could be fit inside a combined telephone set (such as a 306 type, which was like a 302 type but with a gas triode and a slightly different kind of ringer).

B.6 A better circuit yet

In the 500-type telephone set (introduced in 1950), an improved circuit was used for four party full selective ringing (using the newer small gas triode, but a special ringer), and shortly a universal ringer was introduced, suitable both for regular and four party full selective operation.

Figure 17 shows the circuit used for four party full selective operation in 500-type telephone sets.

As we see from its label, we show the one of four wiring arrangements that would be for the ring, negative party. We can easily imagine how this would be changed for the other three stations.

We note for one thing that there is a contact on the switchhook (HS) that is closed with the handset on-hook. When the handset is lifted, the entire ringing circuit is opened. This is to alleviate a rather obscure problem that is beyond the scope of this appendix. (In the body of the article I called attention to the fact that in a conventional ringing setup

this contact could have done the same thing but was in fact not used to do that.)

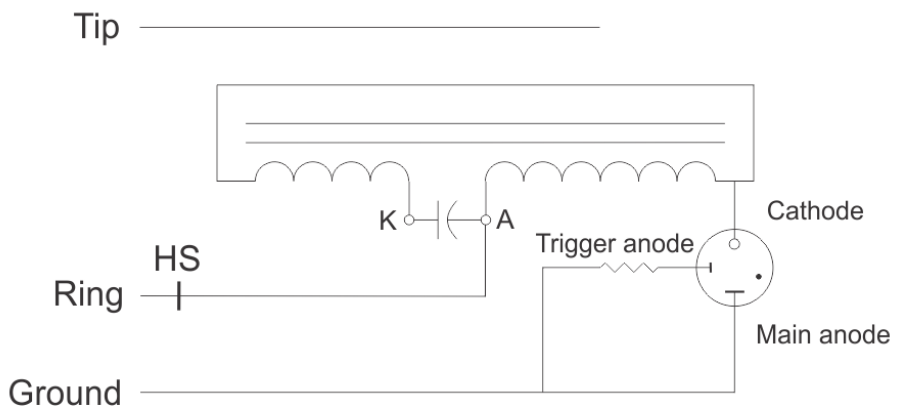

Figure 17. 500-type set four party full selective circuit

We show the one of four wiring arrangements that would be for the ring/negative party. We can easily imagine how this would be changed for the other three stations.

We note for one thing that there is a contact on the switchhook (HS) that is closed with the handset on-hook. When the handset is lifted, the entire ringing circuit is opened. This is to alleviate a rather obscure problem that is beyond the scope of this appendix. (In the body of the article I called attention to the fact that in a conventional ringing setup this contact could have done the same thing but was in fact not used to do that.)

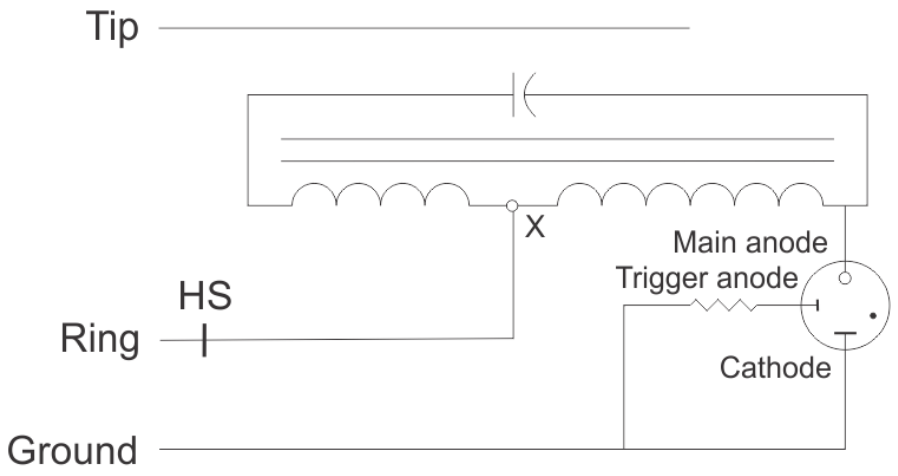

Figure 18. 500-type set four party full selective equivalent circuit

Of importance is the fact that the two separate parts of the ringer coil are essentially connected as an autotransformer. We see that most

clearly in figure 18, where I have moved the capacitor into an electrically-equivalent position to make the autotransformer situation more apparent.

The ringing voltage goes to a tap on the autotransformer. This makes the ringer have a lower impedance that if the whole winding were used, making it draw the proper amount of current from the ringing voltage.

But the entire ringer winding, with the capacitor, forms a parallel-resonant circuit. Thus, although the ringer is actually “excited” by pulses of the ringing signal (only the peaks of one polarity), the current through the winding is nearly sinusoidal. Among other things, this makes the driving of the armature back to the rest position (for the “dong”) more certain.

This in turn eliminates the problem that, although the bias spring normally makes the ringer armature, with no current through the coil, go to the “idle” position, as the ringer wears, it is possible that, with no current through the coil, the armature will stick in the “operated” position . But

So, is this capacitor another needed ingredient in the telephone set. No. This is the capacitor that, in conventional ringing operation, couples the ringer coil to the line, repurposed here.

And is it only to support this circuit for which the ringer winding is in two parts? No. When conventional ringing is used, but the station is the tip p[arty, and there is tip party identification, as I discussed in the body of the article the ringer coil serves as the resistance to ground for the tip party identification (and its inductance reduces the possibility of this introducing noise in the case of AC induction).

Different switching systems required different resistances to ground for this purpose. So to accommodate that, the ringer could is made in two parts, one with a resistance of 1000 ohms, the other with a resistance of 2600 ohms. The wiring of the set for any installation puts these together in such a way that one or the other forms the tip identification resistance that is needed for the particular type of central office involved, but the two are in series (aiding) in their role as an actual ringer coil.

Wow! And was it tricky to have the same value of the capacitance that was appropriate for conventional ringing, in combination with a ringer inductance that was appropriate to other considerations, make the circuit resonate at 20 Hz? Sure. But, this was Bell Telephone Laboratories. That’s what they did!

Now another really subtle cleverness. We might ask why is the actual circuit what we see on the left rather than what we see on the right, which seems more “natural”. The answer is that to do what we see on the right there would need to be a free-floating screw terminal (at point “X”) somewhere to tie the two ends of the ringer winding and the lead from the switchhook together. But the capacitor (so as to accommodate its several lives) was permanently connected to two screw terminals on the transmission circuit “block” (at “A” and “K”). And so the circuit at the left could be set up without need for a further screw terminal.

B.7 Ringer armature sticking

In all the ringers we are considering here, were it not for the bias spring, the armature would be equally happy, with no current through the coil, to rest against (in fact, to be held against) either pole piece—that is, to be in either extreme of its range of motion..

One purpose of the bias spring is to make sure that, with no current through the coil, the armature will rest against a certain one of the pole pieces.

But, things may happen to the ringer so that this does not assuredly happen, and so with no current through the coil we may have the armature in repose against the “wrong” pole piece (described as the ringer “sticking”).

With conventional ringing, this is not a disabling phenomenon. When the AC ringing signal arrives, coupled through the capacitor to the ringer coil, the armature is propelled first in one direction and then the other. Which position it was resting in at the beginning of this process is of no real consequence.

But in four-party full-selective ringing, with gas triodes, in the basic circuit concept, the ringer coil receives only pulses of current in one direction. Thus if the ringer armature had somehow come to repose against the “wrong” pole piece, the pulses would merely try and drive the armature against that pole piece. Thus the ringer would make no sound, and this situation could likely persist, essentially putting the station out of service for incoming calls.

But in the improved circuit used in the 500-type telephone sets (as described in section B.6 of this appendix), the ringer coil is part of a resonant circuit, and even those the “excitation” of that circuit is by pulses of only one polarity, the current through the coil is very nearly a sine wave. Thus, if the armature had been stuck, there would (soon) be current through the coil to move it.

B.8 Pretripping of ringing

In the body of this article I described how, when the called station answers, ringing is stopped and the talking connection to that station is established. This depends on the presence of a DC component in the ringing signal (which we have in both “conventional” ringing and in the four party full selective ringing scheme). (I note that during the “silent interval” between bursts of ringing, there is DC placed on the line

With conventional ringing, there is a capacitor in series with the ringer coil, and with the station on-hook, there is no other DC path across the line. Thus the current in the line does not have a DC component.

When the station answers (goes off-hook), the transmission circuit of the station provides such a DC path, and the current in the line takes on a DC component.

During ringing, the current in the line is monitored by a special relay (or an electronic equivalent) that (hopefully) will only respond to a DC component of the current. So when the station answers, this relay is operated by the ensuing DC component of the line current, and this causes the ringing to be removed from the line and the talking path established. This action is called “tripping” the ringing, and the special relay is often described as the “ring trip” relay.

But a fly is put in this ointment when we utilize the four party full selective ringing scheme. The purpose of the gas tube is to only allow line voltage to pass to the ringer coil when the ringing voltage has a certain direction of its DC component. And the tube only conducts during the direction of the ringing waveform that is in that direction.

The result is that there is a net DC component to the current drawn from the line by the called station during ringing. Hopefully, this is small enough not to operate the ring trip relay. But in certain cases (especially if a station has multiple telephone sets) this does not work out, and the ring trip relay does operate, prematurely bringing ringing to an end (a phenomenon called “ringing pretripping”.

To alleviate this, in some cases a special form of the ringer isolator discussed in section 10.5 is applied. This has two SCR’s to form a “switch” between the line and the ringer. This switch is “closed” when a transistor in the circuit sees a DC component of the ringing signal that is the correct one for the station. But the path to the ringer coil, through the SCR “switch”, also includes the customary capacitor, Thus, except for the trivial current drawn by the detector transistor circuit, there is no DC component to the current through the station during ringing.

B.9 Severe longitudinal voltages

In certain cases, induced longitudinal voltages can have large magnitudes, perhaps over 100 V RMS.

I discussed in the body of this article the stapes that are taken to prevent ringer systems from contributing an unbalance that could convert these longitudinal voltages to metallic voltages and thus introduce noise into the speech connection.

But what about the effect on the ringer systems themselves? In conventional individual line operation, the ringer is connected from tip to ring ("bridged"), and thus does not experience the longitudinal voltages.

However, in divided ringing systems, the ringers are connected from one line conductor to the other, and the longitudinal voltage, if of sufficient magnitude, can cause the ringers to operate, giving an annoying "false ring". Fortunately, the ringers aren't very efficient at 60 Hz, the most likely frequency of the AC induction, which at least limits the potency of the effect.

In cases where this phenomenon recurs, a special type of ringer isolator is used. It looks for ringing voltage between the tip and the ring, and unless such is seen (and of a significant magnitude), the path from one conductor to the ringer is not completed. Of course, since the AC induction creates a longitudinal voltage, the voltage from tip to ring is small (theoretically zero). Thus the induced longitudinal voltage never reaches the ringer.

What about with four party full selective operation? For convenience, Figure 19 lets us see again the illustration of the basic circuit concept of a four party full selective station using a gas triode.

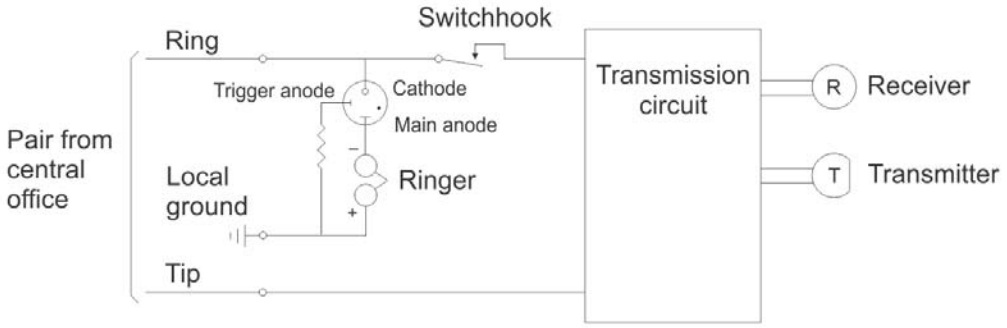

Figure 19. Four party full selective ringing with gas tube

Here we have susceptibility to the same problem: a large longitudinal voltage (the manifestation of it on the ring conductor) will cause the

gas tube trigger gap to fire and then the main gap will fire, allowing the voltage to reach the ringer, causing a false ring.

But here we do not need to add a special ringer isolator—we already have one, in the form of the gas triode, which after all in its normal job serves rather a "ringer isolator" function.

To prepare the gas triode circuit to cope with a large longitudinal voltage problem, we make a simple wiring change, as seen in figure 20 (the changed connection is emphasized).

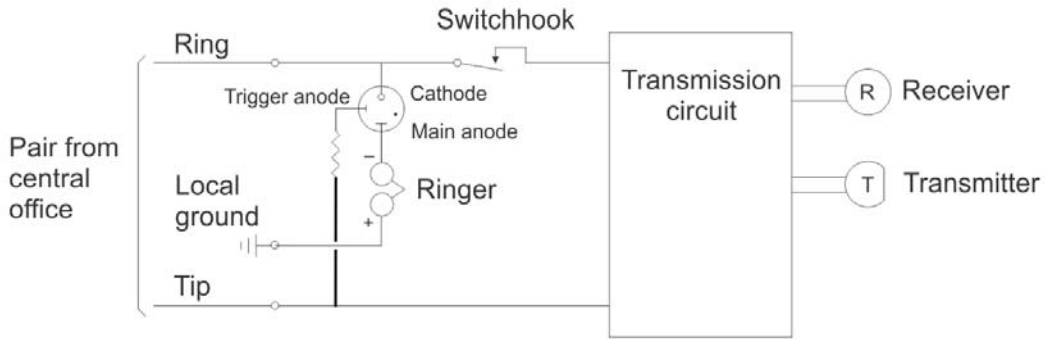

Figure 20. Four party full selective ringing with gas tube—alternate

We see now that the trigger gap of the gas tube (trigger anode to cathode) sees the voltage between the ring and the tip. Thus it does not see the longitudinal voltage (to the degree that this is fully longitudinal).

We can of course do the very same thing for the tip, negative station.

Sadly, we cannot do this for the two positive stations, owing to the asymmetry of the gas tube. That is, we cannot just "invert" the scheme, as the gas tube does not have two cathodes and one anode as would be needed for that ploy.

But in fact, we can accomplish this by using a different kind of gas tube. This has a separate anode-cathode pair for triggering, not utilizing either of the "main" electrodes. We can connect that between tip and ring whichever way we need to have triggering not susceptible to large longitudinal voltages, with the main gap and ringer connected in the direction needed for proper operation.

B.10 Notation

Finally, I mention that often in manuals and specifications for telephone sets from some manufacturers (not Western Electric), and in other literature, the four party full selective ringing system is spoken

of as “superimposed” ringing, distinguished from “straight line” ringing.

But of course “straight line” ringing **is** *superimposed ringing*, in that the ringing signal there has a DC component, the pivotal ingredient of a ringing signal being classified as “superimposed”.

What no doubt brings this improper usage about is that in connection with four party full selective ringing we are more concerned (than when we are considering straight line ringing) with the DC component, namely its polarity.

With straight line ringing, in connection with the ringers themselves, we rarely have to speak about the DC component. So we are less aware that, there too, the ringing is “superimposed”.

Here is a typical quotation, from a patent on an improved ring tripping circuit (US Patent 3,798,394, to William E. Shaffer of Stromberg-Carlson Corporation, among other things a prominent manufacturer of central office equipment):

> The ring trip circuits should also be useable in systems using superimposed ringers. Superimposed ringers have a gas tube in series therewith that breaks down with a preset polarity of DC potential applied across it to pass the AC ringing signal.

Aargh!

-#-

Appendix C
"That's not *my* ring"—a war story

I mentioned in the body of this article that in the four-party full-selective ringing system, each of the four telephone number suffix letters ("party letters") J, M, R, and W referred to a particular one of the four electrical ringing signals.

I also mentioned the association of these four letters with the four electrical signals was not the same in all the Bell Telephone System telephone companies (I think there were three schemes used overall).

The basic manual switchboard used by Bell Telephone Companies was the Western Electric No. 1 common-battery switchboard. This term referred to a very large and varied product line.

In switchboards of that family providing for this type of four-party line operation, for each cord circuit there were four pushbutton ringing keys, marked J, M, R, and W. These applied the corresponding ringing signal through the front cord to the called line..

The circuit and wiring drawings for these switchboards had many "options" for customizing the system configuration and wiring. One of these was for the three (I think) recognized schemes of associating the suffix letters J, M, R, and W with the four electrical signals.

When a Bell Telephone System telephone company equipment engineering organization prepared the specification to Western Electric Company for a new switchboard, they had to specify a choice for each option, including the one I spoke of just above.

In about 1931[41], to provide a more economical manual switchboard for smaller cities, Bell Telephone Laboratories developed the No. 12 switchboard, which we can think of in today's terms as the "No. 1 'lite'". It exploited many forms of what is today called "value engineering", using clever simplified circuits that adequately served the purpose in its limited context.[42]

---

[41] By this time, the advance of automatic ("dial") switching was well on the way to eventually making manual switching obsolete, but there were still plenty of manual switchboards being installed and to be installed in the future.

[42] For example, rather than the line circuit using a relay to detect when the station is first "off hook" to light the lamp at the answering jack, the line current operated the lamp directly, a special new lamp (that is, what a lay person would call "bulb") being developed for the purpose.

If one of these was equipped for four-party full-selective ringing, there were not four pushbutton keys for each cord circuit, as on a No. 1 switchboard. (These were mechanically complex and rather costly.) Rather, the cord circuit had the familiar single lever-type ringing key used with individual lines or two-party lines working on a jack-per-line basis.

Then, at the right hand end of each operator's position there was a single set of four pushbutton keys (locking) (the "master ringing keys"), which controlled the ringing voltage fed to the ringing keys of all cord circuits at that position. So to ring 2368J, the operator plugged the front cord into the 2368 jack, pushed the "J" ringing selection key, and used the ringing key on the cord circuit to ring the line.[43]

New Jersey Bell Telephone company at one time was installing quite a number of the No. 12 switchboards, many of them working with four-party full-selective lines. But their early experience was that the "master ringing key" setup was a pain for the operators.

So New Jersey Bell arranged with Bell Telephone Laboratories to develop a special version of the No. 12 switchboard that would have the traditional four-party ringing keys on each cord circuit. This was intended only for their use (an arrangement often made in the Bell Telephone System). But that did not preclude its being ordered by other companies.

Because of that situation, the drawings for this special version of the No. 12 switchboard did not have any option for the scheme of associating the "party letters" with the four ringing signals. The drawings just were set up for the scheme used by New Jersey Bell, which in fact was one of the less-frequently used ones.

This of course worked out fine for New Jersey Bell.

But shortly, engineers in other telephone companies that were using the No. 12 switchboard with four-party lines, and who, like New Jersey Bell, found the "master ringing key" arrangement cumbersome in use, spotted in certain indexes of drawings the set of drawings for

---

[43] In fact when the switchboard was set up for two party divided-ringing lines on a jack-per-line basis, where the No. 1 switchboard would have a ringing key for each cord, which operated in two directions to ring on tip or ring, here the single ringing key at each cord circuit normally only did ring-side ringing, and for tip-side ringing on a line the operator operated a lever-type "master ringing key" to switch all ringing keys to tip-side ringing.

"Special No. 12 switchboard for New Jersey Bell with four-party ringing keys for each cord circuit".

So these companies gleefully ordered that version. As their equipment engineers went over the check list of all the options for which they had to specify a choice, there was of course nothing about the assignment of the party letters. But most likely, their company used a scheme different from the one used by New Jersey Bell.

So the switchboards were built and installed. When they were "cut over" (probably superseding a smaller switchboard of an earlier design, whose capacity limit was about to be exceeded by the emerging needs), all the calls to four-party line subscribers rang mostly the wrong stations.

As a historical note, the last Bell Telephone System manual switchboard in the state of New Jersey, decommissioned in the mid-1960s, was a No. 12. I had the honor of being invited to its dismantlement. One of its positions was on display (working) in my personal museum for a number of years.

I learned of the story told in the Appendix while doing research in connection with the "restoration" of this switchboard position.

#